IABU Headquarters
Delta Electronics, Inc.
Taoyuan Technology Center
No.18, Xinglong Rd., Taoyuan City,
Taoyuan County 33068, Taiwan
TEL: 886-3-362-6301 / FAX: 886-3-371-6301

Asia
Delta Electronics (Jiangsu) Ltd.
Wujiang Plant 3
1688 Jiangxing East Road,
Wujiang Economic Development Zone
Wujiang City, Jiang Su Province,
People's Republic of China (Post code: 215200)
TEL: 86-512-6340-3008 / FAX: 86-769-6340-7290

Delta Greentech (China) Co., Ltd.
238 Min-Xia Road, Pudong District,
ShangHai, P.R.C.
Post code : 201209
TEL: 86-21-58635678 / FAX: 86-21-58630003

Delta Electronics (Japan), Inc.
Tokyo Office
2-1-14 Minato-ku Shibadaimon,
Tokyo 105-0012, Japan
TEL: 81-3-5733-1111 / FAX: 81-3-5733-1211

Delta Electronics (Korea), Inc.
1511, Byucksan Digital Valley 6-cha, Gasan-dong,
Geumcheon-gu, Seoul, Korea, 153-704
TEL: 82-2-515-5303 / FAX: 82-2-515-5302

Delta Electronics Int'l (S) Pte Ltd
4 Kaki Bukit Ave 1, #05-05, Singapore 417939
TEL: 65-6747-5155 / FAX: 65-6744-9228

Delta Electronics (India) Pvt. Ltd.
Plot No 43 Sector 35, HSIIDC
Gurgaon, PIN 122001, Haryana, India
TEL : 91-124-4874900 / FAX : 91-124-4874945

Americas
Delta Products Corporation (USA)
Raleigh Office
P.O. Box 12173,5101 Davis Drive,
Research Triangle Park, NC 27709, U.S.A.
TEL: 1-919-767-3800 / FAX: 1-919-767-8080

Delta Greentech (Brasil) S.A
Sao Paulo Office
Rua Itapeva, 26 - 3° andar Edificio Itapeva One-Bela Vista
01332-000-São Paulo-SP-Brazil
TEL: +55 11 3568-3855 / FAX: +55 11 3568-3865

Europe
Deltronics (The Netherlands) B.V.
Eindhoven Office
De Witbogt 15, 5652 AG Eindhoven, The Netherlands
TEL: 31-40-2592850 / FAX: 31-40-2592851

*We reserve the right to change the information in this catalogue without prior notice.

CP2000_C_EN_20120218

Automation for a Changing World

Delta Sensorless Vector Control Drives

CP2000 Series

For HVAC Drive Applications

www.delta.com.tw/ia

Call 1(800)985-6929 for Sales deltaacdrives.com sales@deltaacdrives.com

CP2000

WHY CP2000?

IABU green technology

To fulfill Delta's mission "to provide innovative, clean and energy-efficient solutions for a better tomorrow", we are proud to introduce a sensorless vector control VFD which is made for pump and fan applications and HVAC systems.

With the best performance in the industry, this VFD is specially designed for related applications with an intelligent PID controller.

Functions such as sensorless vector control, multi-segment V/F control curve and soft start greatly improve the efficiency of the variable torque loads and constant horsepower loads.

Water Circulating Pumps Control

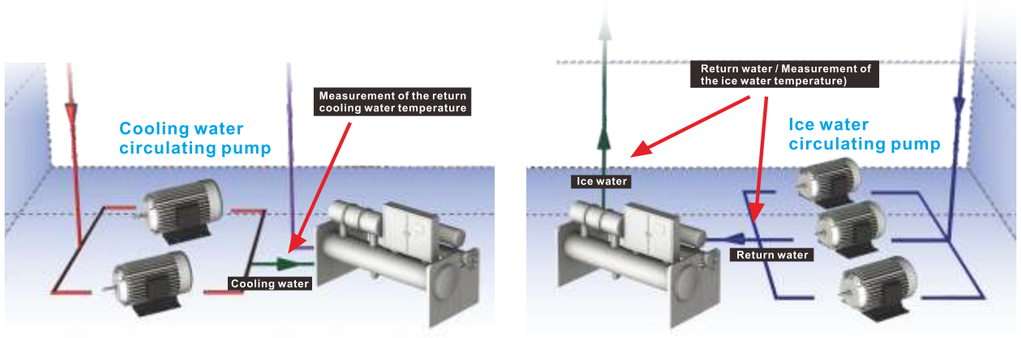

Figure 1: Multi-Pump Control

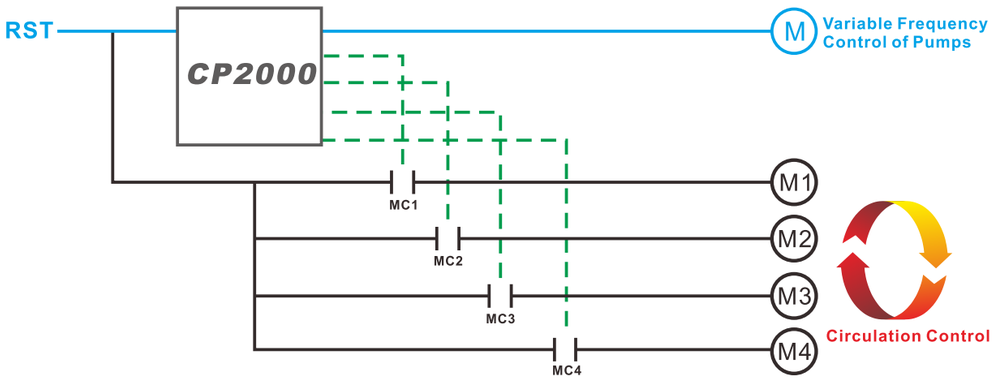

Figure 2: Fixed Quantity and Circulation Control of Pumps

Features

- 01 LCD keypad offers a user-friendly operation interface. The display screen can be defined by the user with TP-Editor soft.
- 02 Quick setting, user defined parameter management, and parameter copy functions make the installation fast and easy.
- 03 Modular design for flexible extension and easy maintenance.
- 04 Built-in BACnet and MODBUS RS-485. Various optional communication cards such as ProfiBUS-DP, DeviceNet, MODBUS TCP, EtherNet-IP, and CANopen.
- 05 Long-life design.
- 06 The PCB (Printed Circuit Board) coating enhances reliability and durability.
- 07 Fire mode and Bypass functions provide safe operation in an emergency.
- 08 Useful functions for pump and fan applications, such as: PID control, sleep/wake up functions, flying start, and skip frequency.
- 09 Multi-pumps control functions, such as: fixed time, fixed quantity, circulating controls. The driver can control a maximum of eight pumps at the same time. An optional relay extension card is available depending on the pump quantity.
- 10 Built-in PLC 10K step and Real Time Clock.

Standard Models

Power range: 230V 0.75~90kW, 460V: 0.75~400kW

230V (kW)	0.75	1.5	2.2	3.7	5.5	7.5	11	15	18.5	22	30	37	45	55	75	90
230V (HP)	1	2	3	5	7.5	10	15	20	25	30	40	50	60	75	100	125
Frame Size	A					B			C			D		E		

460V (kW)	0.75	1.5	2.2	3.7	4.0	5.5	7.5	11	15	18.5	22	30	37	45	55	75	90
460V (HP)	1	2	3	5	5	7.5	10	15	20	25	30	40	50	60	75	100	125
Frame Size	A							B			C			D			

460V (kW)	90	110	132	160	185	220	280	315	355	400
460V (HP)	125	150	175	215	250	300	375	425	475	536
Frame Size	E		F		G		H			

Advanced Drive Technology

* Note: Please refer to the Product Speciffication

High-Speed Network

- Advanced Network Functions.
  - RS-485 built in: International Standard Communication Interface.
  - Built-in BACnet , MODBUS
- Various communication network cards and field bus cards are available.
- CANopen (DS402) , MODBUSTCP , PROFIBUS , DeviceNet , EtherNet/IP

Features for Building Automation Applications

- The four-segment exponential response curve can adjust the input voltage to increase performance for variable torque loads applications, especially for pump and fan applications.
- Flying start and restart functions avoids a momentary power down provide the best operation for fan applications.
- Skip frequency function avoids motor vibration at a specific frequency band and protects the equipment.
- Low current protection protects the motor from load loss.
- Built-in BACnet lowers the cost of wiring for building automation.

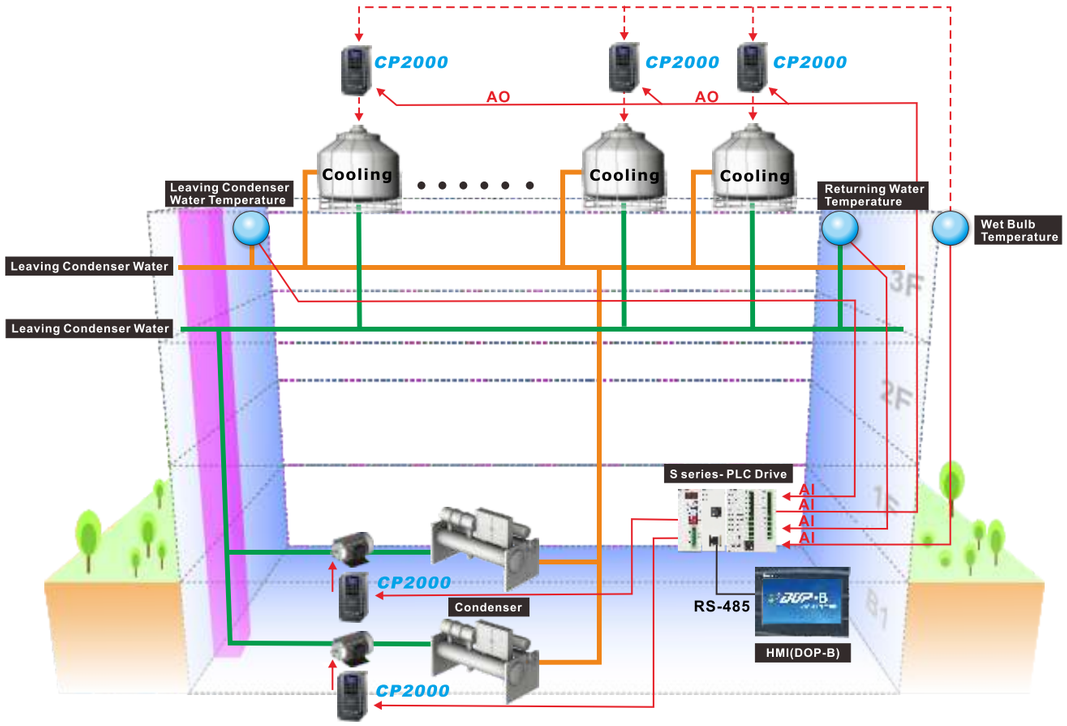

Increases Motor Performance

- The sensorless vector control (SVC) and AUTO-TUNING functions increase motor performance for variable torque loads applications.
- Deceleration Energy Backup (DEB): when a power loss occurs the drive decelerates and stops the motor to protect the equipment.
- Optimal Acceleration/Deceleration function makes the motor run smoothly and reduces vibration during start and stop.
- Various control functions for saving energy, such as: PID control, sleep/wake up function, and auto energy saving mode.

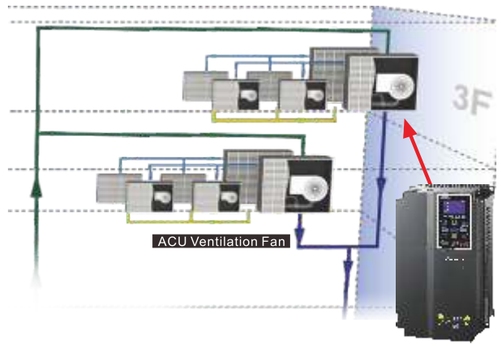

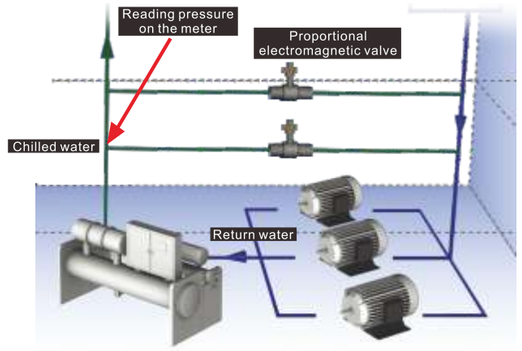

Intelligent Programmable Logic Controller

- By connecting the built-in Delta PLC (programmable logic controller) to a network, you can easily use distributed control mode and independent operation to create an intelligent control space.
- The real time clock & calendar function allows you to program the PLC procedure, ON/OFF in chronological order, daylight saving time and more.

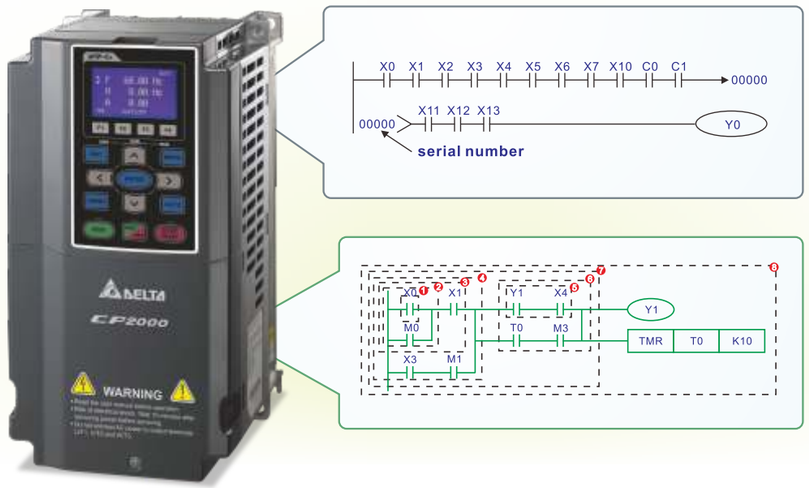

Modular Design

Modular design enhances drive and control. Depending on the requirements of system applications maintenance you can install input/output expansion cards, communication cards, hot plug LCD keypads, assembly terminal blocks and removable fans.

- KPC-CCO1 Keypad
- Convenient push-on/push-off, to install or remove.easily.
- Standard RJ45 network cable.

- The product nameplate shows the input/output voltage, input/output current, the frequency range, and more.
- RFI filter
- Loosen the safety screw on the top cover, press left and right side to remove the cover then start wiring.
- Modularized fan design, easy to change, easy to clean for longer product life.

Designed for Environmental Adaptability

- Built-in DC choke*
- Built-in RFI filter
- Enhanced coating on the control board's PCB to ensure reliability of VFD in an adverse environment.
- Flange mounting: designed to completely separate the heat dissipating system and other electronic components. Its installation can disperse heat out of the VFD. Cooling fan method can blow cold air into aluminum heat sink. Both heat dissipating methods are efficient, choose the one that fits the working environment for the best heat dissipation results.

*Note: Pleaee refer to the Product Specification

Operating Environment

DO NOT expose the AC motor drive to harsh environments, such as dust, direct sunlight, corrosive/ inflammable gasses humidity, liquid or vibrations. The salt in the air must be less than 0.01mg/cm² per year.

Environment	Installation location	IEC60364-1/IEC60664-1 Pollution degree 2,Indoor use only	
	Surrounding Temperature	Storage/ Transportation	-25℃ ~ +70℃
		No-condensation, non-frozen	
	Rated Humidity	Operation	Max. 90%
		Storage/ Transportation	Max. 95%
		No condensed water	
	Air Pressure	Operation/ Storage	86 to 106 kPa
		Transportation	70 to 106 kPa
	Pollution Level	IEC721-3-3	
		Operation	Class 3C2：Class 3S2
		Storage	Class 2C2：Class 2S2
		Transportation	Class 1C2：Class 1S2
		No concentrate	
	Altitude	Operation	If AC motor drive is installed at altitude 0~1000m, follow normal operation restriction. If it is installed at altitude 1000~3000m, decrease 2% of rated current or lower 0.5□ of temperature for every 100m increase in altitude. Maximum altitude for Corner Grounded is 2000m.
Package Drop		Storage/ Transportation	ISTA procedure 1A(according to weight) IEC60068-2-31
Vibration		1.0mm, peak to peak value range from 2Hz to 13.2 Hz; 0.7G~1.0G range from 13.2Hz to 55Hz; 1.0G range from 55Hz to 512 Hz. Complies with IEC 60068-2-6	
Impact		IEC/EN 60068-2-27	
Operation Position		Max. allowed offset angle±10° (under normal installation position)	10° 10°

Specification for Operation Temperature and Protection Level

Model	Frame	Top cover	Conduit Box	Protection Level	Operation Temperature
VFDxxxxCP23A-21 VFDxxxxCP43A-21 VFDxxxxCP4EA-21 VFDxxxxCP43C-21	Frame A~C 230V: 0.75~30kW 460V: 0.75~37kW	Remove top cover	Standard conduit plate	IP20/UL Open Type	ND: -10°C ~50°C LD: -10°C ~40°C
		Standard with top cover		IP20/UL Type1/NEMA1	ND: -10°C ~40°C LD: -10°C ~40°C
	Frame D~H 230V: above 37kW 460V: above 45kW	N/A	With conduit box	IP20/UL Type1/NEMA1	ND: -10°C ~40°C LD: -10°C ~40°C
VFDxxxxCP23A-00 VFDxxxxCP43A-00 VFDxxxxCP43C-00	Frame D~H 230V: above 37kW 460V: above 45kW	N/A	With conduit box	IP00 IP20/UL Open Type 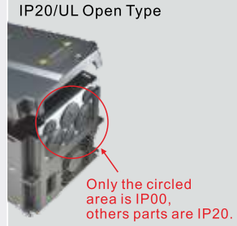 Only the circled area is IP00, others parts are IP20.	ND: -10°C ~50°C LD: -10°C ~40°C (ND=Normal Duty LD=Light Duty)

Product Specifications

230V

	Frame Size	A					B			C			D		E		
	Model : VFD-____ CP23A-__	007	015	022	037	055	075	110	150	185	220	300	370	450	550	750	900
Output Rating – Light Duty	Rated Output Capacity (kVA)	2.0	3.0	4.0	6.0	8.4	12	18	24	30	36	42	58	72	86	110	128
	Rated Output Current (A)	5	7.5	10	15	21	31	46	61	75	90	105	146	180	215	276	322
	Applicable Motor Output(kW)	0.75	1.5	2.2	3.7	5.5	7.5	11	15	18.5	22	30	37	45	55	75	90
	Applicable Motor Output(HP)	1	2	3	5	7.5	10	15	20	25	30	40	50	60	75	100	125
	Overload tolerance	120% of rated current for 1 minute															
	Max. output frequency (Hz)	600.00Hz													400.00Hz		
	Carrier Frequency (kHz)	2~15kHz(8KHz)								2~10kHz(6KHz)					2~9kHz(4KHz)		
Output Rating – Normal Duty	Rated Output Capacity (kVA)	1.8	2.0	3.2	4.4	6.8	10	13	20	26	30	36	48	58	72	86	102
	Rated Output Current (A)	4.6	5	8	11	17	25	33	49	65	75	90	120	146	180	215	255
	Applicable Motor Output(kW)	0.4	0.75	1.5	2.2	3.7	5.5	7.5	11	15	18.5	22	30	37	45	55	75
	Applicable Motor Output(HP)	0.5	1	2	3	5	7.5	10	15	20	25	30	40	50	60	75	100
	Overload tolerance	120% of rated current for 1 minute;160% of rated current for 3 seconds															
	Max. output frequency (Hz)	600.00Hz													400.00Hz		
	Carrier Frequency (kHz)	2~15kHz(8KHz)								2~10kHz(6KHz)					2~9kHz(4KHz)		
Input Rating	Input Current (A) Light Duty	6.4	9.6	15	22	25	35	50	65	83	100	116	146	180	215	276	322
	Input Current (A) Normal Duty	3.9	6.4	12	16	20	28	36	52	72	83	99	124	143	171	206	245
	Rated Voltage/Frequency	3-Phase AC 200V~240V(-15%~+10%), 50/60Hz															
	Operating Voltage Range	170~265Vac															
	Frequency Tolerance	47~63Hz															
	Cooling method	Natural Cooling	Fan Cooling														
	Braking Chopper	Frame A,B,C Built-in											Frame D and above: Optional				
	DC choke	Frame A,B,C Optional											Frame D and above: 3% built-in				
	EMI Filter	Optional															

460V

	Frame	A							B			C		
	Models VFD-____CP43A-__; VFD-____CP4EA-__;	007	015	022	037	040	055	075	110	150	185	220	300	370
Output Rating – Light Duty	Rated Output Capacity(kVA)	2.4	2.9	4.0	6.0	8.4	9.6	11.2	18	24	29	36	45	57
	Rated Output Current (A)	3	3.7	5	7.5	10.5	12	14	22.5	30	36	45	56	72
	Applicable Motor Output(kW)	0.75	1.5	2.2	3.7	4.0	5.5	7.5	11	15	18.5	22	30	37
	Applicable Motor Output(HP)	1	2	3	5	5	7.5	10	15	20	25	30	40	50
	Overload tolerance	120% of rated current for 1 minute												
	Max. output frequency(Hz)	600.00Hz												
	Carrier Frequency(kHz)	2~15kHz(8KHz)										2~10kHz(6KHz)		
Output Rating – Normal Duty	Rated Output Capacity(kVA)	2.2	2.4	3.2	4.8	7.2	8.4	10	14	19	25	30	36	48
	Rated Output Current (A)	2.8	3.0	4.0	6.0	9.0	10.5	12	18	24	32	38	45	60
	Applicable Motor Output(kW)	0.4	0.75	1.5	2.2	3.7	4.0	5.5	7.5	11	15	18.5	22	30
	Applicable Motor Output(HP)	0.5	1	2	3	5	5	7.5	10	15	20	25	30	40
	Overload tolerance	120% of rated current for 1 minute;160% of rated current for 3 seconds												
	Max. output frequency(Hz)	600.00Hz												
	Carrier Frequency (kHz)	2~15kHz(8KHz)										2~10kHz(6kHz)		
Input Rating	Input Current (A) Light Duty	4.3	5.4	7.4	11	16	18	20	25	33	39	47	58	76
	Input Current (A) Normal Duty	3.5	4.3	5.9	8.7	14	15.5	17	20	26	35	40	47	63
	Rated Voltage/Frequency	3-Phase AC 380V~480V(-15%~+10%), 50/60Hz												
	Operating Voltage Range	323~528Vac												
	Frequency Tolerance	47~63Hz												
	Cooling method	Natural Cooling	Fan Cooling											
	Braking Chopper	Frame A,B,C Built-in												
	DC choke	Frame A,B,C Optional												
	EMI Filter	Frame A,B,C of VFD____CP4EA-__, EMI filter Built-in Frame A,B,C of VFD____CP43A-__, EMI filter NOT Built-in												

460V

	Frame	D				E		F		G		H		
	Models VFD-____CP43A-__; VFD-____CP43C-__;	450	550	750	900	1100	1320	1600	1850	2200	2800	3150	3550	4000
Output Rating – Light Duty	Rated Output Capacity(kVA)	73	88	115	143	175	196	247	273	367	422	491	544	613
	Rated Output Current (A)	91	110	144	180	220	246	310	343	460	530	616	683	770
	Applicable Motor Output(kW)	45	55	75	90	110	132	160	185	220	280	315	355	400
	Applicable Motor Output(HP)	60	75	100	125	150	175	215	250	300	375	425	475	536
	Overload tolerance	120% of rated current for 1 minute												
	Max. output frequency(Hz)	600.00Hz				400.00Hz								
	Carrier Frequency(kHz)	2~10kHz(6KHz)				2~9kHz(4KHz)								
Output Rating – Normal Duty	Rated Output Capacity(kVA)	58	73	88	120	143	175	207	247	295	367	438	491	544
	Rated Output Current (A)	73	91	110	150	180	220	260	310	370	460	550	616	683
	Applicable Motor Output(kW)	37	45	55	75	90	110	132	160	185	220	280	315	355
	Applicable Motor Output(HP)	50	60	75	100	125	150	175	215	250	300	375	425	475
	Overload tolerance	120% of rated current for 1 minute;160% of rated current for 3 seconds												
	Max. output frequency(Hz)	600.00Hz				400.00Hz								
	Carrier Frequency (kHz)	2~10kHz(6KHz)				2~9kHz(4KHz)								
Input Rating	Input Current (A) Light Duty	91	110	144	180	220	246	310	343	460	530	616	683	770
	Input Current (A) Normal Duty	74	101	114	157	167	207	240	300	380	400	494	555	625
	Rated Voltage/Frequency	3-Phase AC 380V~480V(-15%~+10%), 50/60Hz												
	Operating Voltage Range	323~528Vac												
	Frequency Tolerance	47~63Hz												
	Cooling method	Fan Cooling												
	Braking Chopper	Frame D and above: Optional												
	DC choke	Frame D and above: 3% built-in												
	EMI Filter	Frame D and above: Optional												

Control Characteristics	Control Method	1: V/F(V/F control), 2: SVC(Sensorless Vector Control)
	Starting Torque	Reach up to 160% or above at 0.5Hz
	V/F Curve	4 point adjustable V / F curve and square curve
	Speed Response Ability	5Hz
	Torque Limit	Normal Duty: Max. 170% torque current
	Torque Accuracy	±5%
	Max. Output Frequency (Hz)	230V series: 600.00Hz (55kW and above: 400.00Hz); 460V series: 600.00Hz (90kW and above: 400.00Hz)
	Frequency Output Accuracy	Digital command:±0.01%, -10°C~+40°C, Analog command: ±0.1%, 25±10°C
	Output Frequency Resolution	Digital command: 0.01Hz, Analog command: max. output frequency x 0.03/60Hz (±11 bit)
	Overload Tolerance	Light duty: 120% of rated current for 1 minute; Normal duty: 120% of rated current for 1 minute;160% of rated current for 3 seconds
	Frequency Setting Signal	0~+10V, 4~20mA, 0~20mA, pulse input
	Accel. / Decel. Time	0.00~600.00/0.0~6000.0 seconds
	Main control function	Fault restart; Torque limit; Smart stall; Dwell; 3-wire sequence Speed search; Parameter copy; JOG frequency; Slip compensation; Torque compensation S-curve accel/decel; Energy saving control; Accel/Decel. Time switch; Frequency upper/ lower limit settings; Momentary power loss ride thru PID control (with sleep function); Auto-Tuning (rotational, stationary); DC injection braking at start/stop; BACnet Communication; MODBUS communication (RS-485 Rj45, max. 115.2 kbps) Over-torque detection; 16-step speed (max)
	Fan Control	**230V series:** Models higher than VFD150CP23A-21(included) are PWM control; Models lower than VFD150CP23A-21(not included) are on / off switch control. **460V series:** Models higher than VFD150CP43A-21(included) are PWM control; Models lower than VFD150CP43A-21(not included) are on / off switch control.
Protection Characteristics	Motor Protection	Electronic thermal relay protection
	Over-current Protection	Normal Duty: Over-current protection for 240% rated current Current clamp 『Normal duty: 170~175%』
	Over-voltage Protection	230: drive will stop when DC-BUS voltage exceeds 410V 460: drive will stop when DC-BUS voltage exceeds 820V
	Over-temperature Protection	Built-in temperature sensor
	Stall Prevention	Stall prevention during acceleration, deceleration and running independently
	Restart After Instantaneous Power Failure	Parameter setting up to 20 seconds
	Grounding Leakage Current Protection	Leakage current is higher than 50% of rated current of the AC motor drive
	International Certifications	CE UL GB 12668.3

Wiring

Wiring Diagram for Frame A~C,3-phase power is provided

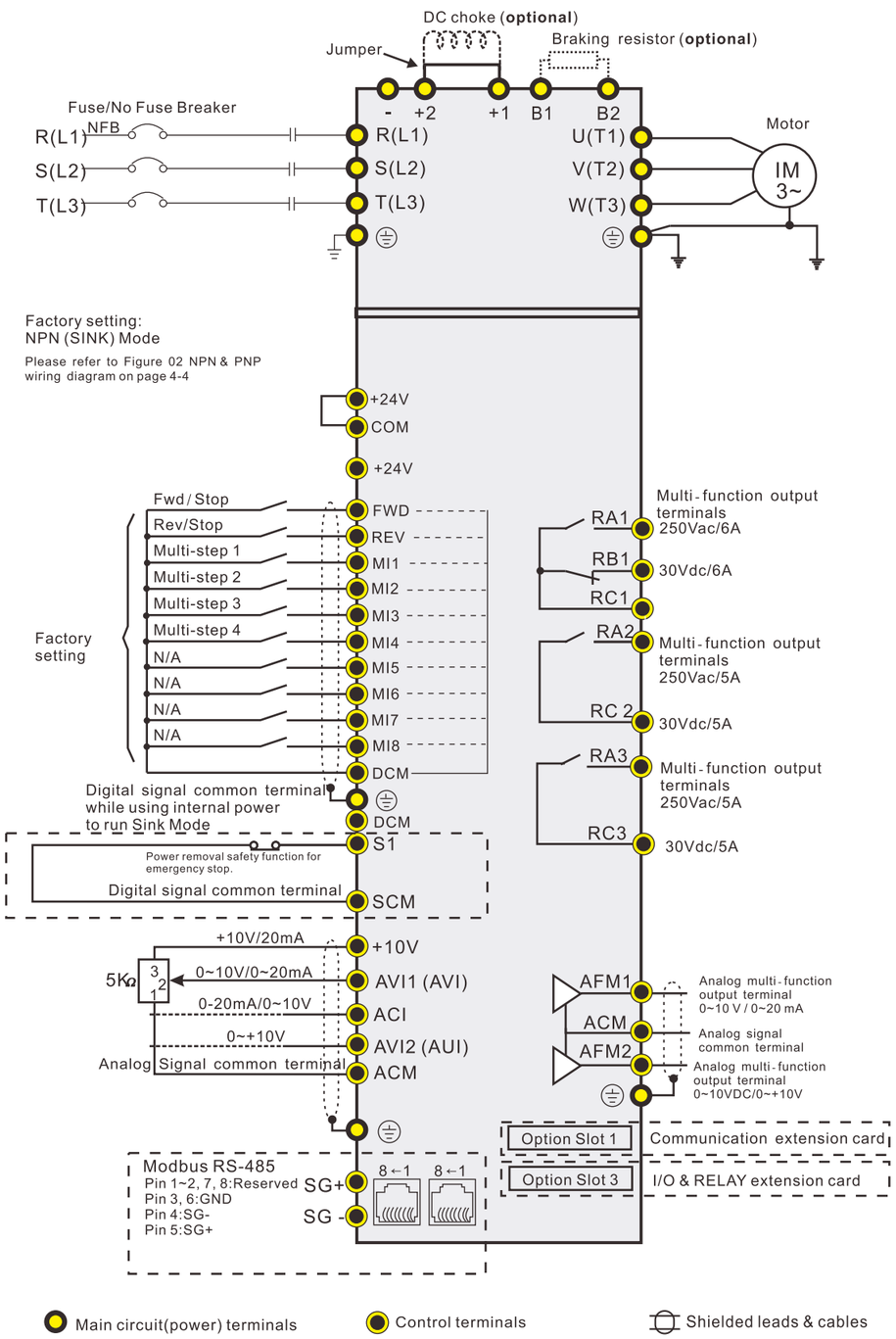

Wiring Diagram for Frame D,3-phase power is provided

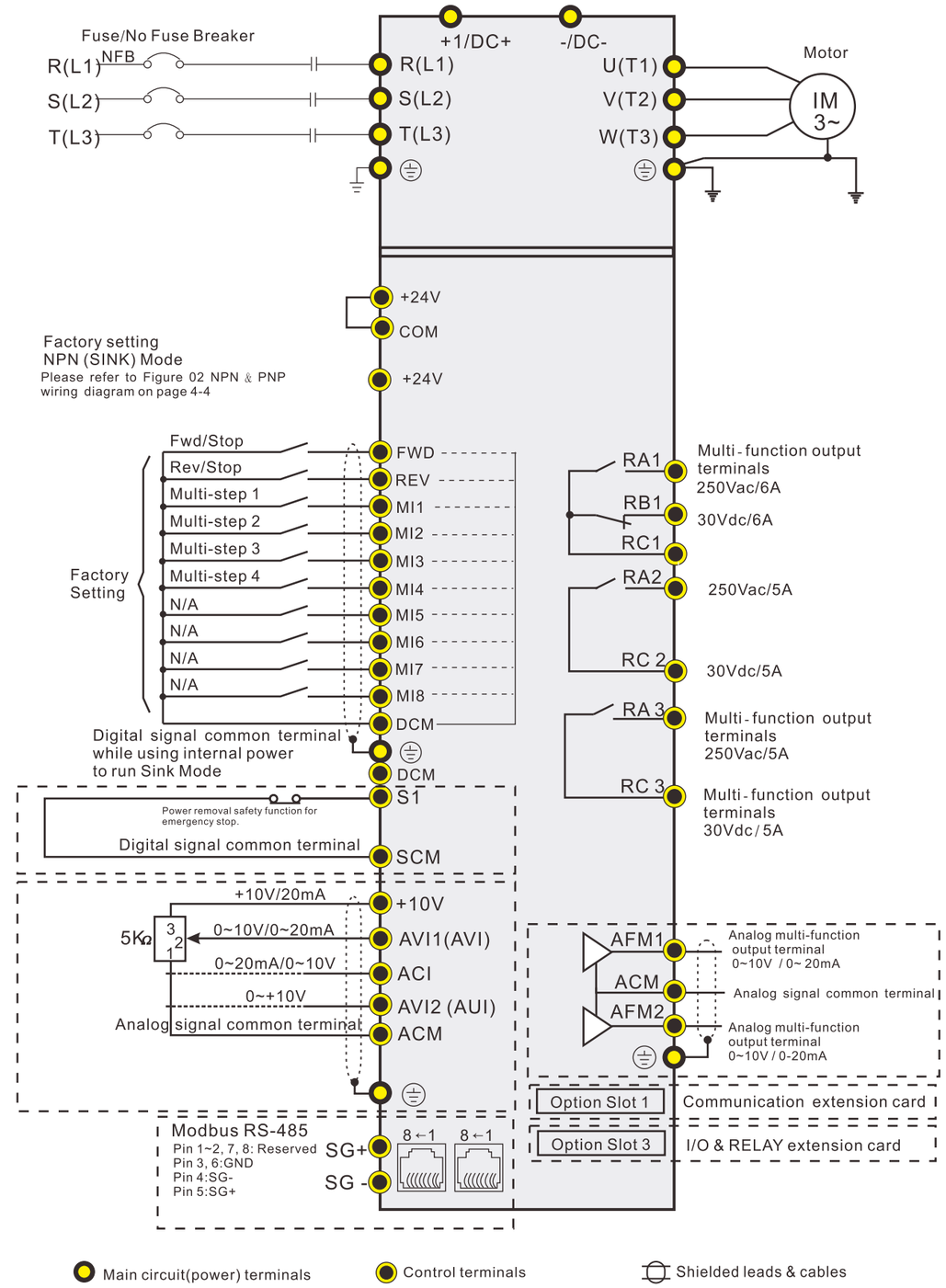

Wiring

Wiring diagram for frame E and above, 3-phase power is provided

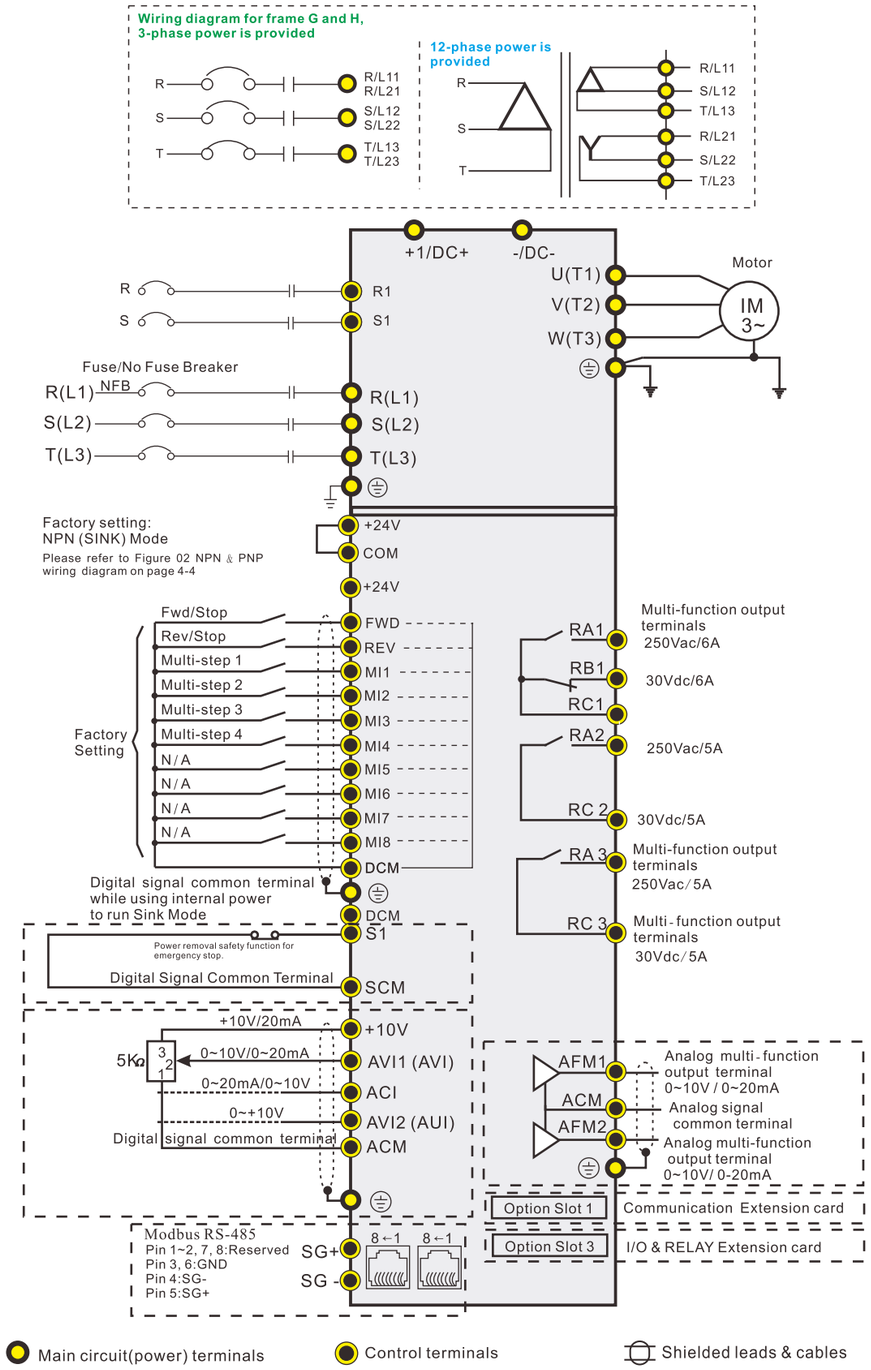

Dimensions

■ Digital Keypad

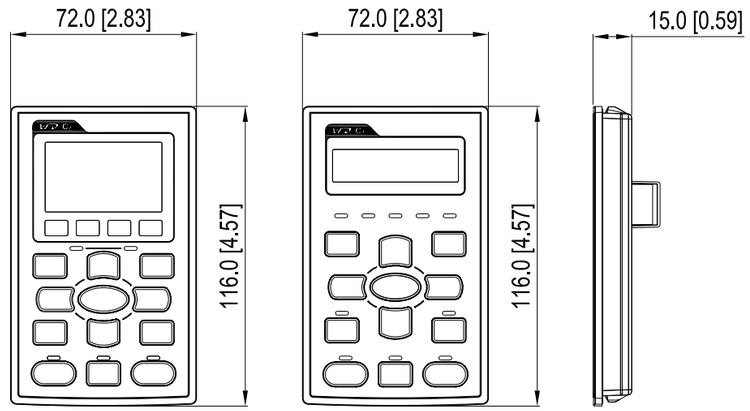

KPC-CC01 Standard LCD Keypad

KPC-CE01 Optional LED Keypad

■ **Frame A**

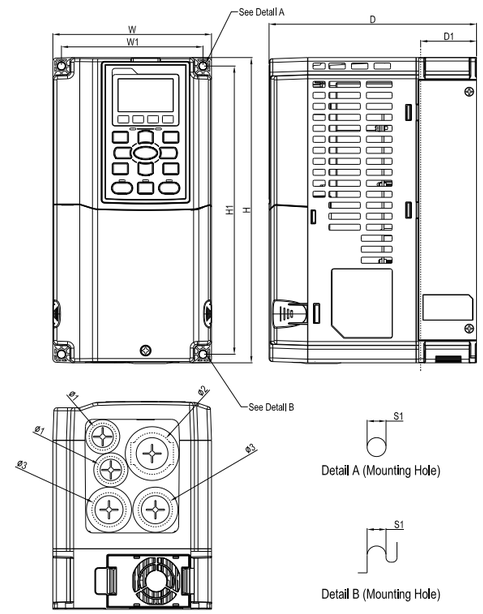

MODEL

VFD007CP23A-21
VFD015CP23A-21
VFD022CP23A-21
VFD037CP23A-21
VFD055CP23A-21
VFD007CP43A-21
VFD015CP43A-21
VFD022CP43A-21
VFD037CP43A-21
VFD040CP43A-21
VFD055CP43A-21
VFD075CP43A-21
VFD007CP4EA-21
VFD015CP4EA-21
VFD022CP4EA-21
VFD037CP4EA-21
VFD040CP4EA-21
VFD055CP4EA-21
VFD075CP4EA-21

Unit : mm[inch]

Frame		W	H	D	W1	H1	D1*	S1	Ø 1	Ø 2	Ø 3
A1	mm	130.0	250.0	170.0	116.0	236.0	45.8	6.2	22.2	34.0	28.0
	inch	[5.12]	[9.84]	[6.69]	[4.57]	[9.29]	[1.80]	[0.24]	[0.87]	[1.34]	[1.10]

D1* : Flange mounting

Dimensions

Frame B

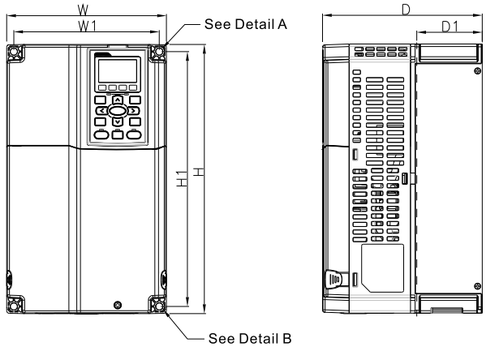

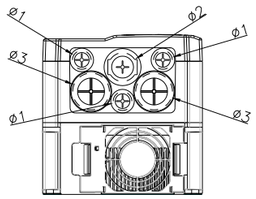

Detail A (Mounting Hole)

Detail B (Mounting Hole)

MODEL

VFD075CP23A-21
VFD110CP23A-21
VFD150CP23A-21
VFD110CP43A-21
VFD150CP43A-21
VFD185CP43A-21
VFD110CP4EA-21
VFD150CP4EA-21
VFD185CP4EA-21

Unit : mm[inch]

Frame		W	H	D	W1	H1	D1*	S1	Ø1	Ø2	Ø3
B1	mm	190.0	320.0	190.0	173.0	303.0	77.9	8.5	22.2	34.0	28.0
	inch	7.48	12.60	7.48	6.81	11.93	3.07	0.33	0.87	1.34	1.10

Frame C

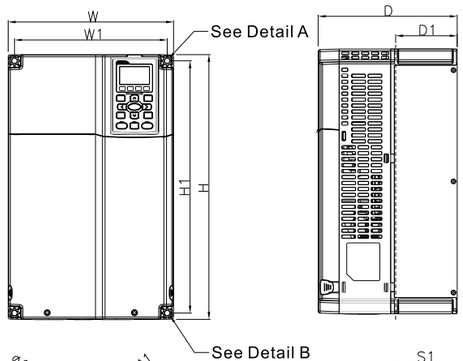

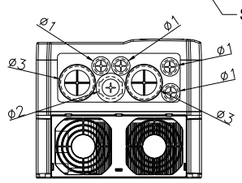

Detail A (Mounting Hole)

Detail B (Mounting Hole)

MODEL

VFD185CP23A-21
VFD220CP23A-21
VFD300CP23A-21
VFD220CP43A-21
VFD300CP43A-21
VFD370CP43A-21
VFD220CP4EA-21
VFD300CP4EA-21
VFD370CP4EA-21

Unit : mm[inch]

Frame		W	H	D	W1	H1	D1*	S1	Ø1	Ø2	Ø3
C1	mm	250.0	400.0	210.0	231.0	381.0	92.9	8.5	22.2	34.0	50.0
	inch	9.84	15.75	8.27	9.09	15.00	3.66	0.33	0.87	1.34	1.97

D1* : Flange mounting

Frame D1

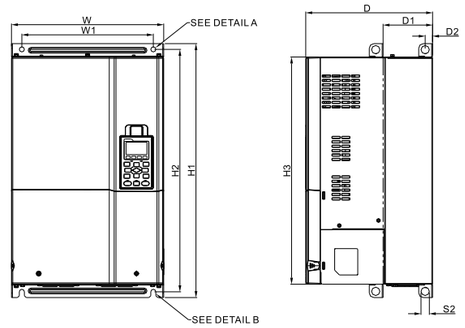

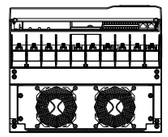

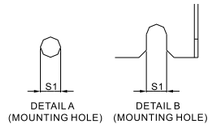

MODEL

VFD370CP23A-00
VFD450CP23A-00
VFD450CP43A-00
VFD750CP43A-00
VFD900CP43A-00

Unit : mm[inch]

Frame		W	H	D	W1	H1	H2	H3	D1*	D2	S1	S2	Ø1	Ø2	Ø3
D1	mm	330.0	-	275.0	285.0	550.0	525.0	492.0	107.2	16.0	11.0	18.0	-	-	-
	inch	[12.99]		[10.83]	[11.22]	[21.65]	[20.67]	[19.37]	[4.22]	[0.63]	[0.43]	[0.71]			

Frame D2

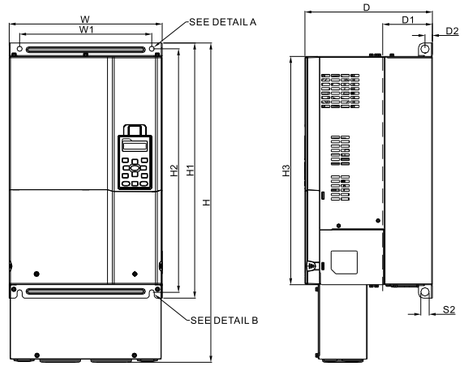

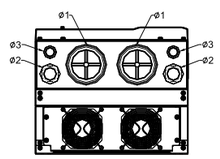

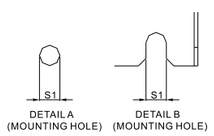

MODEL

VFD370CP23A-21
VFD450CP23A-21
VFD450CP43A-21
VFD750CP43A-21
VFD900CP43A-21

Unit : mm[inch]

Frame		W	H	D	W1	H1	H2	H3	D1*	D2	S1	S2	Ø1	Ø2	Ø3
D1	mm	330.0	688.3	275.0	285.0	550.0	525.0	492.0	107.2	16.0	11.0	18.0	76.2	34.0	22.0
	inch	[12.99]	[27.10]	[10.83]	[11.22]	[21.65]	[20.67]	[19.37]	[4.22]	[0.63]	[0.43]	[0.71]	[3.00]	[1.34]	[0.87]

Dimensions

Frame E1

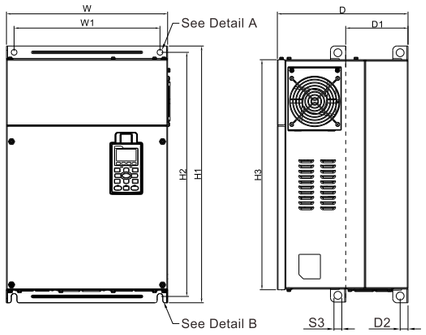

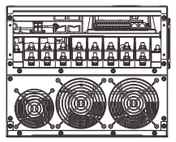

MODEL

VFD550CP23A-00
VFD750CP23A-00
VFD900CP23A-00
VFD1100CP43A-00
VFD1320CP43A-00

Unit : mm[inch]

Frame		W	H	D	W1	H1	H2	H3	D1*	D2	S1,S2	S3	Ø1	Ø2	Ø3
E1	mm	370.0	-	300.0	335.0	589	560.0	528.0	143.0	18.0	13.0	18.0	-	-	-
	inch	[14.57]		[11.81]	[13.19]	[23.19]	[22.05]	[20.80]	[5.63]	[0.71]	[0.51]	[0.71]			

Frame E2

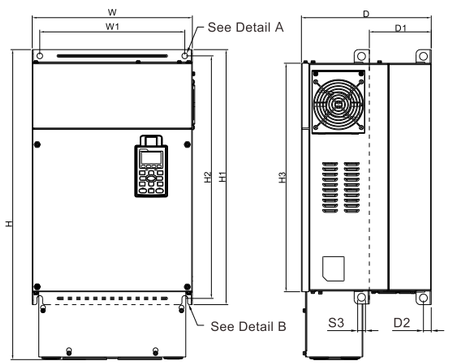

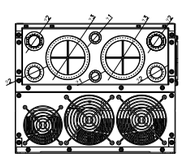

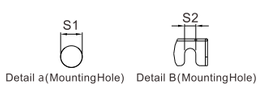

MODEL

VFD550CP23A-21
VFD750CP23A-21
VFD900CP23A-21
VFD1100CP43A-21
VFD1320CP43A-21

Unit : mm[inch]

Frame		W	H	D	W1	H1	H2	H3	D1*	D2	S1,S2	S3	Ø1	Ø2	Ø3
E2	mm	370.0	715.8	300.0	335.0	589	560.0	528.0	143.0	18.0	13.0	18.0	22.0	34.0	92.0
	inch	[14.57]	[28.18]	[11.81]	[13.19]	[23.19]	[22.05]	[20.80]	[5.63]	[0.71]	[0.51]	[0.71]	[0.87]	[1.34]	[3.62]

Frame F1

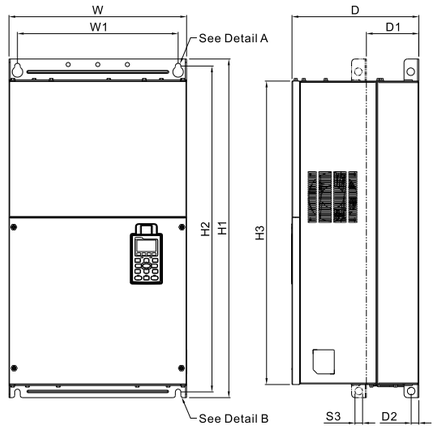

MODEL

VFD1600CP43A-00
VFD1850CP43A-00

Unit : mm[inch]

Frame		W	H	D	W1
F1	mm	420.0	-	300.0	380.0
	inch	[16.54]		[11.81]	[14.96]

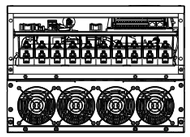

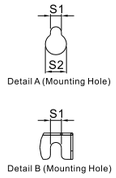

Frame		H1	H2	H3	D1*	D2	S1	S2	S3	Ø1	Ø2	Ø3
F1	mm	800.0	770.0	717.0	124.0	18.0	13.0	25.0	18.0	92.0	35.0	22.0
	inch	[31.50]	[30.32]	[28.23]	[4.88]	[0.71]	[0.51]	[0.98]	[0.71]	[3.62]	[1.38]	[0.87]

D1* : Flange mounting

Frame F2

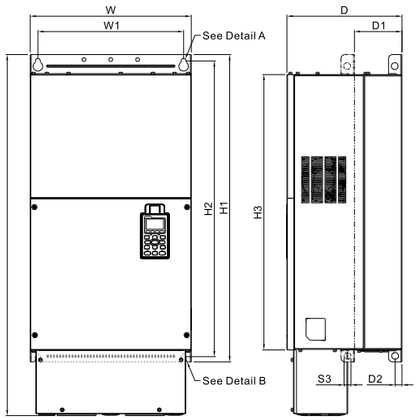

MODEL

VFD1600CP43A-21
VFD1850CP43A-21

Unit : mm[inch]

Frame		W	H	D	W1
F2	mm	420.0	940.0	300.0	380.0
	inch	[16.54]	[37.00]	[11.81]	[14.96]

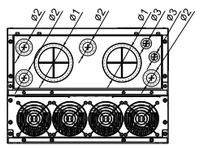

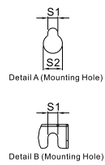

Frame		H1	H2	H3	D1*	D2	S1	S2	S3	Ø1	Ø2	Ø3
F2	mm	800.0	770.0	717.0	124.0	18.0	13.0	25.0	18.0	92.0	35.0	22.0
	inch	[31.50]	[30.32]	[28.23]	[4.88]	[0.71]	[0.51]	[0.98]	[0.71]	[3.62]	[1.38]	[0.87]

D1* : Flange mounting

Dimensions

Frame G1

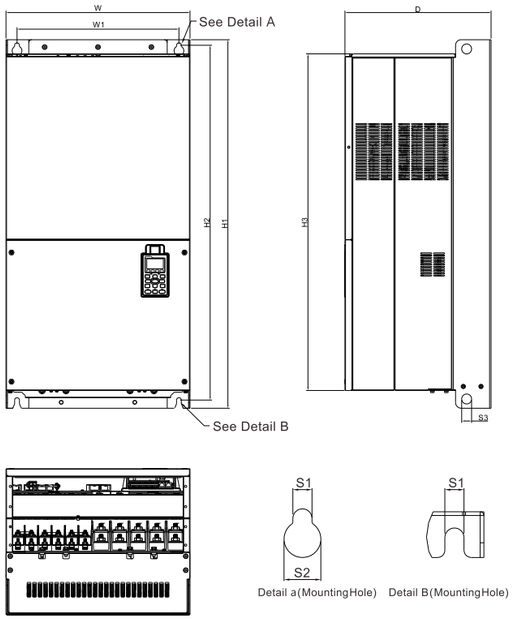

MODEL

VFD2200CP43A-00
VFD2800CP43A-00

Unit : mm[inch]

Frame		W	H	D
G1	mm	500.0	-	397.0
	inch	[19.69]		[15.63]

Frame		W1	H1	H2	H3	S1	S2	S3	Ø 1	Ø 2	Ø 3
G1	mm	440.0	1000.0	963.0	913.6	13.0	26.5	27.0	-	-	-
	inch	[217.32]	[39.37]	[37.91]	[35.97]	[0.51]	[1.04]	[1.06]			

Frame G2

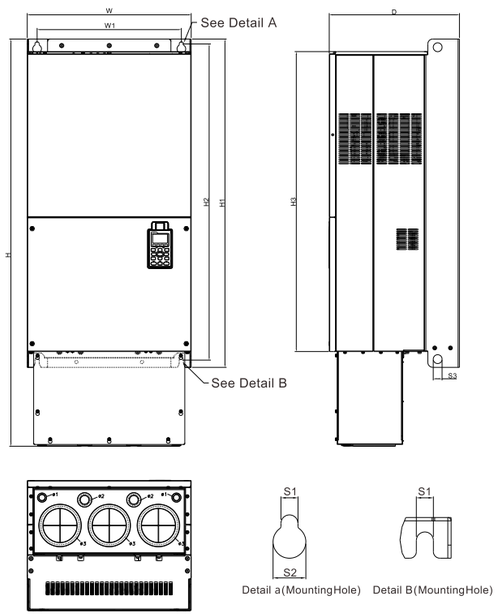

MODEL

VFD2200CP43A-21
VFD2800CP43A-21

Unit : mm[inch]

Frame		W	H	D
G2	mm	500.0	1240.2	397.0
	inch	[19.69]	[48.83]	[15.63]

Frame		W1	H1	H2	H3	S1	S2	S3	Ø 1	Ø 2	Ø 3
G2	mm	440.0	1000.0	963.0	913.6	13.0	26.5	27.0	22.0	34.0	117.5
	inch	[217.32]	[39.37]	[37.91]	[35.97]	[0.51]	[1.04]	[1.06]	[0.87]	[1.34]	[4.63]

Frame H1

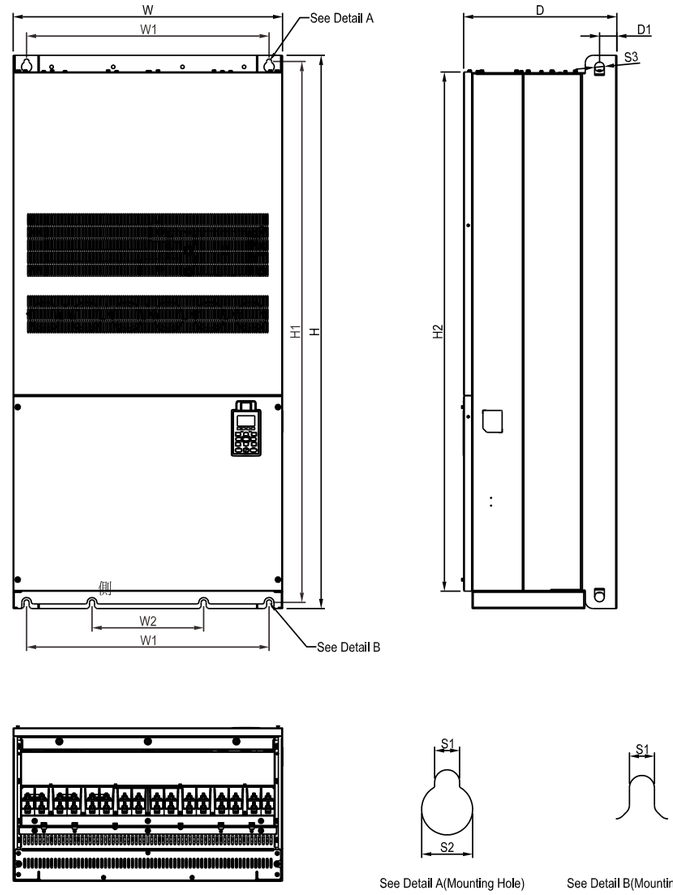

MODEL

VFD3150CP43A-00
VFD3550CP43A-00
VFD4000CP43A-00

Unit : mm[inch]

Frame		W	H	D	W1	W2	W3	W4	W5	W6	H1	H2	H3	H4
H1	mm	700.0	-	398.0	-	630.0	290.0	-	-	-	-	1435.0	1403.0	-
	inch	[27.56]		[15.67]		[24.80]	[11.42]					[56.50]	[55.24]	

Frame		H5	D1	D2	D3	D4	D5	D6	S1	S2	S3	Ø 1	Ø 2	Ø 3
H1	mm	1346.6	45.0	-	-	-	-	-	13.0	26.5	25.0	-	-	-
	inch	[53.02]	[1.77]						[0.51]	[1.04]	[0.98]			

Dimensions

Frame H2

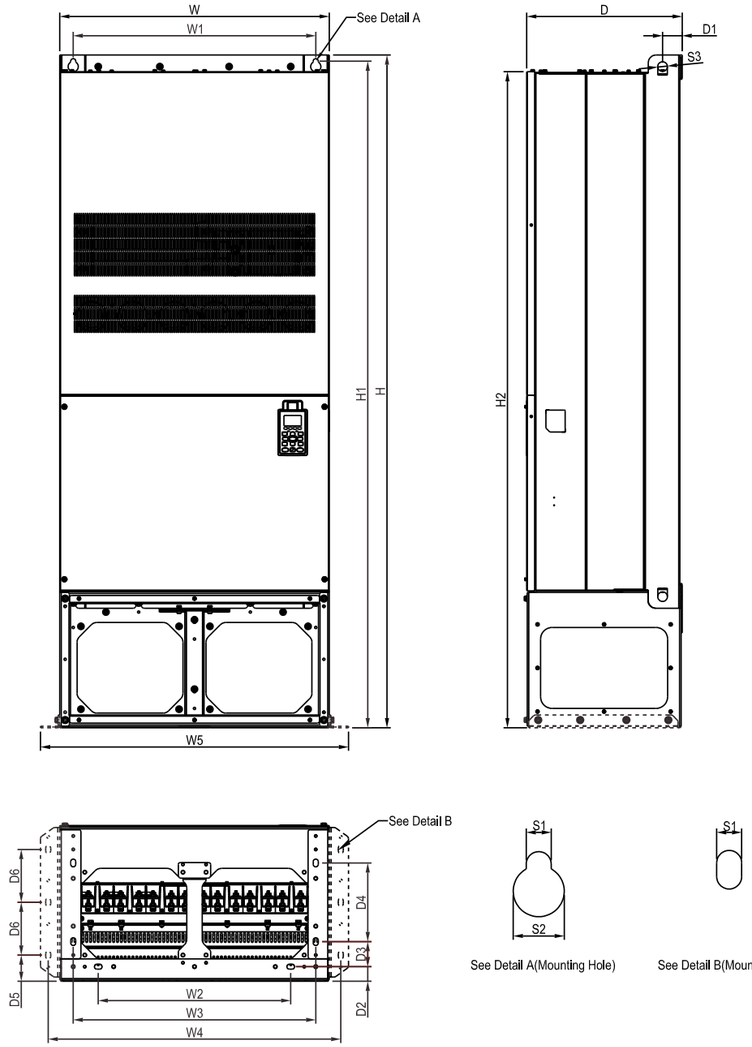

MODEL

VFD3150CP43C-00
VFD3550CP43C-00
VFD4000CP43C-00

Unit : mm[inch]

Frame		W	H	D	W1	W2	W3	W4	W5	W6	H1	H2	H3	H4
H2	mm	700.0	1745.0	404.0	800.0	-	-	500.0	630.0	760.0	1729.0	-	-	1701.6
	inch	[27.56]	[68.70]	[15.91]	[31.50]			[19.69]	[24.80]	[29.92]	[68.07]			[66.99]

Frame		H5	D1	D2	D3	D4	D5	D6	S1	S2	S3	Ø 1	Ø 2	Ø 3
H2	mm	1346.6	51.0	38.0	65.0	204.0	68.0	137.0	13.0	26.5	25.0	-	-	-
	inch	[53.02]	[2.01]	[1.50]	[2.56]	[8.03]	[2.68]	[5.39]	[0.51]	[1.04]	[0.98]			

Frame H3

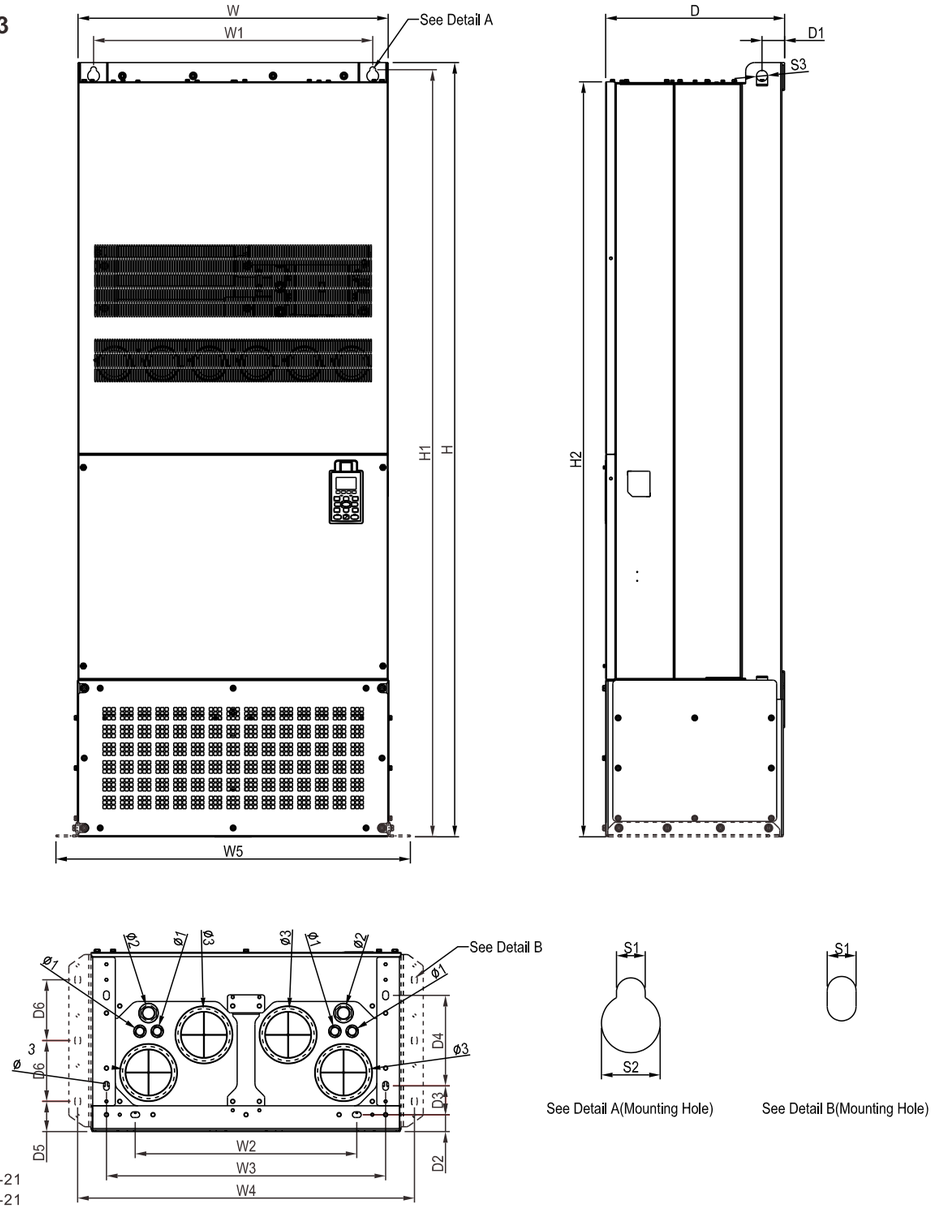

MODEL

VFD3150CP43C-21
VFD3550CP43C-21
VFD4000CP43C-21

Unit : mm[inch]

Frame		W	H	D	W1	W2	W3	W4	W5	W6	H1	H2	H3	H4
H3	mm	700.0	1745.0	404.0	800.0	-	-	500.0	630.0	760.0	1729.0	-	-	1701.6
	inch	[27.56]	[68.70]	[15.91]	[31.50]			[19.69]	[24.80]	[29.92]	[68.07]			[66.99]

Frame		H5	D1	D2	D3	D4	D5	D6	S1	S2	S3	Ø 1	Ø 2	Ø 3
H3	mm	1346.6	51.0	38.0	65.0	204.0	68.0	137.0	13.0	26.5	25.0	22.0	34.0	117.5
	inch	[53.02]	[2.01]	[1.50]	[2.56]	[8.03]	[2.68]	[5.39]	[0.51]	[1.04]	[0.98]	[0.87]	[1.34]	[4.63]

Option Cards

EMC-D42A

I/O Extension Card

Terminals	Descriptions
COM	Common for multi-function input terminals Select SINK（NPN）/SOURCE（PNP）in J1 jumper / external power supply
MI10~ MI13	Refer to parameters 02-26~02-29 to program the multi-function inputs MI10~MI13. Internal power is applied from terminal E24: +24Vdc±5% 200mA, 5W External power +24Vdc: max. voltage 30Vdc, min. voltage 19Vdc, 30W ON: the activation current is 6.5mA OFF: leakage current tolerance is 10μA
MO10~MO11	Multi-function output terminals (photocoupler) Duty-cycle: 50% Max. output frequency: 100Hz Max. current: 50mA Max. voltage: 48Vdc
MXM	Common for multi-function output terminals MO10, MO11(photocoupler) Max 48Vdc 50mA

EMC-D611A

Terminals	Descriptions
AC	AC power common for multi-function input terminal (Neutral)
MI10~ Mi15	Refer to Pr. 02.26~ Pr. 02.31 for multi-function input selection Input voltage: 100~130VAC Input frequency: 57~63Hz Input impedance: 27Kohm Terminal response time: ON: 10ms OFF: 20ms

EMC-R6AA

Relay Extension Card

Terminals	Descriptions
R10A~R15A R10C~R15C	Refer to Pr. 02.36~ Pr. 02.41 for multi-function input selection Resistive load: 5A(N.O.)/3A(N.C.) 250VAC 5A(N.O.)/3A(N.C.) 30Vdc Inductive load (COS 0.4) 2.0A(N.O.)/1.2A(N.C.) 250VAC 2.0A(N.O.)/1.2A(N.C.) 30Vdc It is used to output each monitor signal, such as for drive in operation, frequency attained or overload indication.

EMC-BPS01

External Power Supply Card

Terminals	Descriptions
24V GND	Input Power Specification: 24V±5% Maximum input current:0.5A Note: 1) Do not connect the control terminal +24V terminal directly to the EMC-BPS01 input terminal 24V. 2) Do not connect the control terminal GND directly to the EMC-BPS01 input terminal GND to ensure a proper grounding.

CMC-MOD01

Features

- MDI/MDI-X auto-detect
- E-mail alarm
- Virtual serial port.
- Baud rate: 10/100Mbps auto-detect
- Supports Modbus TCP protocol
- AC motor drive keypad/Ethernet configuration

Network Interface

Interface	RJ-45 with Auto MDI/MDIX
Number of ports	1 Port
Transmission method	IEEE 802.3, IEEE 802.3u
Transmission cable	Category 5e shielding 100M
Transmission speed	10/100 Mbps Auto-Detect
Network protocol	ICMP, IP, TCP, UDP, DHCP, SMTP, MODBUS OVER TCP/IP, Delta Configuration

CMC-EIP01

Features

- MDI/MDI-X auto-detect
- Virtual serial port
- Supports Modbus TCP and Ethernet/IP protocol
- Baud rate: 10/100Mbps auto-detect
- AC motor drive keypad/Ethernet configuration

Network Interface

Interface	RJ-45 with Auto MDI/MDIX
Number of ports	1 Port
Transmission method	IEEE 802.3, IEEE 802.3u
Transmission cable	Category 5e shielding 100M
Transmission speed	10/100 Mbps Auto-Detect
Network protocol	ICMP, IP, TCP, UDP, DHCP, HTTP, SMTP, MODBUS OVER TCP/IP, EtherNet/IP, Delta Configuration

CMC-PD01

Features

- Supports PZD control data exchange.
- Supports PKW polling AC motor drive parameters.
- Supports user diagnosis function.
- Auto-detects baud rates; supports Max. 12Mbps.

PROFIBUS DP Connector

Interface	DB9 connector
Transmission method	High-speed RS-485
Transmission cable	Shielded twisted pair cable
Electrical isolation	500VDC

Communication

Message type	Cyclic data exchange
Module name	CMC-PD01
GSD document	DELA08DB.GSD
Company ID	08DB (HEX)
Serial transmission speed supported (auto-detection)	9.6kbps; 19.2kbps; 93.75kbps; 187.5kbps; 125kbps; 250kbps; 500kbps; 1.5Mbps; 3Mbps; 6Mbps; 12Mbps (bits per second)

Option Cards

CMC-DN01

Features

- Based on the high-speed communication interface of Delta HSSP protocol, able to conduct immediate control of AC motor drive.
- Supports Group 2 only connection and polling I/O data exchange.
- For I/O mapping, supports Max. 32 words of input and 32 words of output.
- Supports EDS file configuration in DeviceNet configuration software.
- Supports all baud rates on DeviceNet bus: 125kbps, 250kbps, 500kbps and extendable serial transmission speed mode.
- Node address and serial transmission speed can be set up on AC motor drive.
- Power supplied from AC motor drive.

DeviceNet Connector

Interface	5-PIN open removable connector. Of 5.08mm PIN interval
Transmission method	CAN
Transmission cable	Shielded twisted pair cable (with 2 power cables)
Transmission speed	125kbps, 250kbps, 500kbps and extendable serial transmission speed mode
Network protocol	DeviceNet protocol

AC Motor Drive Connection Port

Interface	50 PIN communication terminal
Transmission method	SPI communication
Terminal function	1. Communicating with AC motor drive 2. Transmitting power supply from AC motor drive
Communication protocol	Delta HSSP protocol

EMC-COP01

RJ-45 Pin Definition

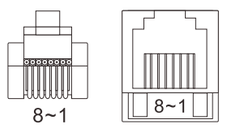

Pin	Pin name	Definition
1	CAN_H	CAN_H bus line (dominant high)
2	CAN_L	CAN_L bus line (dominant low)
3	CAN_GND	Ground/0V/V-
7	CAN_GND	Ground/0V/V-

Specifications

Interface	RJ-45
Number of ports	1 Port
Transmission method	CAN
Transmission cable	CAN standard cable
Transmission speed	1M 500k 250k 125k 100k 50k
Communication protocol	CANopen

CANopen Communication Cable

Model: TAP-CB03, TAP-CB04

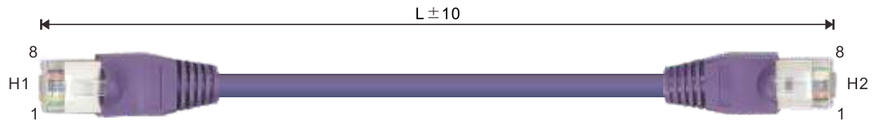

Title	Part No.	L	
		mm	inch
1	TAP-CB03	500±10	19±0.4
2	TAP-CB04	1000±10	39±0.4

CANopen Breakout Box

Model: TAP-CN03

Ordering Information

Frame A 	**230V:** 0.75kW~5.5kW **460V:** 0.75kW~7.5kW	VFD007CP23A-21 VFD015CP23A-21 VFD022CP23A-21 VFD037CP23A-21 VFD055CP23A-21	VFD007CP43A-21 VFD015CP43A-21 VFD022CP43A-21 VFD037CP43A-21 VFD040CP43A-21 VFD055CP43A-21 VFD075CP43A-21	VFD007CP4EA-21 VFD015CP4EA-21 VFD022CP4EA-21 VFD037CP4EA-21 VFD040CP4EA-21 VFD055CP4EA-21 VFD075CP4EA-21
Frame B 	**230V:** 7.5kW~15kW **460V:** 11kW~18.5kW	VFD075CP23A-21 VFD110CP23A-21 VFD150CP23A-21	VFD110CP43A-21 VFD150CP43A-21 VFD185CP43A-21	VFD110CP4EA-21 VFD150CP4EA-21 VFD185CP4EA-21
Frame C 	**230V:** 18.5kW~30kW **460V:** 22kW~37kW	VFD185CP23A-21 VFD220CP23A-21 VFD300CP23A-21	VFD220CP43A-21 VFD300CP43A-21 VFD370CP43A-21	VFD220CP4EA-21 VFD300CP4EA-21 VFD370CP4EA-21
Frame D 	**230V:** 37kW~45kW **460V:** 45kW~90kW	**Frame D1:** VFD370CP23A-00 VFD450CP23A-00 VFD450CP43A-00 VFD750CP43A-00 VFD900CP43A-00	**Frame D2:** VFD370CP23A-21 VFD450CP23A-21 VFD450CP43A-21 VFD750CP43A-21 VFD900CP43A-21	
Frame E 	**230V:** 55kW~90kW **460V:** 110kW~132kW	**Frame E1:** VFD550CP23A-00 VFD750CP23A-00 VFD900CP23A-00 VFD1100CP43A-00 VFD1320CP43A-00	**Frame E2:** VFD550CP23A-21 VFD750CP23A-21 VFD900CP23A-21 VFD1100CP43A-21 VFD1320CP43A-21	
Frame F 	**460V:** 160kW~185kW	**Frame F1:** VFD1600CP43A-00 VFD1850CP43A-00	**Frame F2:** VFD1600CP43A-21 VFD1850CP43A-21	

Frame G 	**460V:** 220kW~280kW	**Frame G1:** VFD2200CP43A-00 VFD2800CP43A-00	**Frame G2:** VFD2200CP43A-21 VFD2800CP43A-21	
Frame H 	**460V:** 315kW~400kW	**Frame H1:** VFD3150CP43A-00 VFD3550CP43A-00 VFD4000CP43A-00	**Frame H2:** VFD3150CP43C-00 VFD3550CP43C-00 VFD4000CP43C-00	**Frame H3:** VFD3150CP43C-21 VFD3550CP43C-21 VFD4000CP43C-21

Model Name

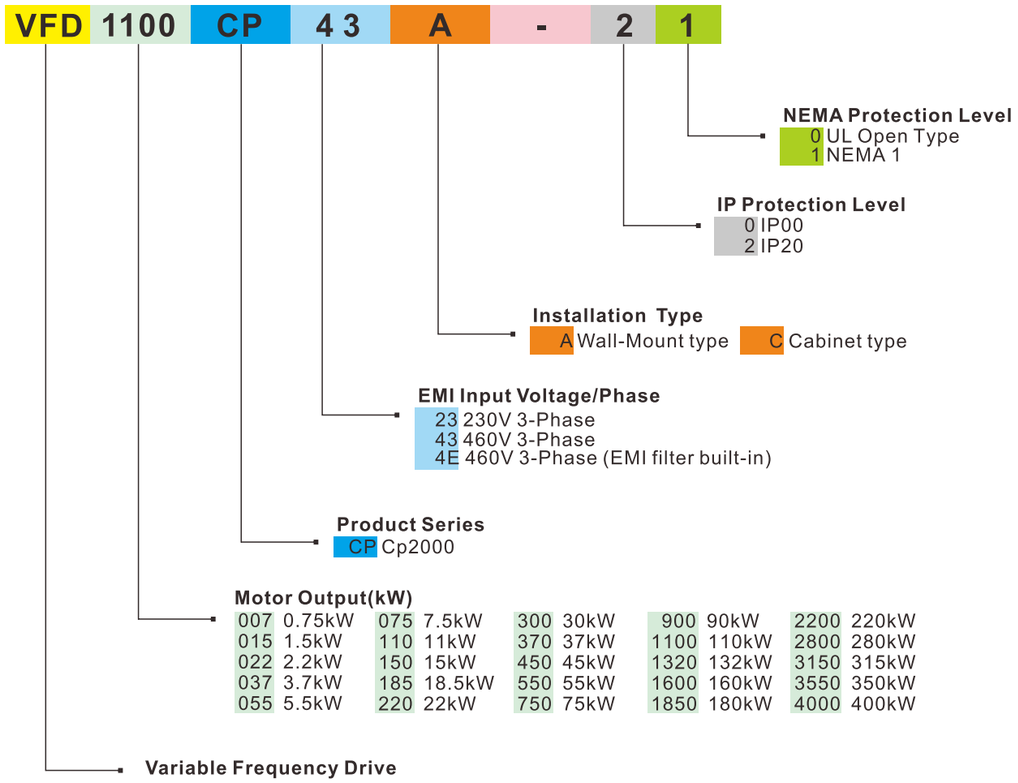

Global Operations

ASIA (Taiwan)


Taoyuan Technology Center (Green Building)


Taoyuan Plant 1


Tainan Plant (Diamond-rated Green Building)

ASIA (China)


Wujiang Plant 3


Delta Electronics

ASIA (Japan)


Tokyo Office

ASIA (India)


Rudrapur Plant (Green Building)

EUROPE


Amsterdam, Netherlands

AMERICA


Research Triangle Park

Sales Channels of Delta Industrial Automation are Located Worldwide in 74 Countries

▲ Factories 2 ■ Branch offices 60 ⊙ R&D Centers 5 □ Distributors 581