DELTA ELECTRONICS, INC.

www.delta.com.tw/industrialautomation


### IABU Headquarters

**Delta Electronics, Inc.**
Taoyuan1
31-1, Xingbang Road, Guishan Industrial Zone,
Taoyuan County 33370, Taiwan, R.O.C.
TEL: 886-3-362-6301 / FAX: 886-3-362-7267

### Asia

**Delta Electronics (Jiang Su) Ltd.**
Wujiang Plant3
1688 Jiangxing East Road,
Wujiang Economy Development Zone,
Wujiang City, Jiang Su Province,
People's Republic of China (Post code: 215200)
TEL: 86-512-6340-3008 / FAX: 86-512-6340-7290

**Delta Greentech (China) Co., Ltd.**
238 Min-Xia Road, Cao-Lu Industry Zone,Pudong, Shanghai,
People's Republic of China
Post code : 201209
TEL: 021-58635678 / FAX: 021-58630003

**Delta Electronics (Japan), Inc.**
Tokyo Office
Delta Shibadaimon Building, 2-1-14
Shibadaimon, Minato-Ku, Tokyo, 105-0012,
Japan
TEL: 81-3-5733-1111 / FAX: 81-3-5733-1211

**Delta Electronics (Korea), Inc.**
234-9, Duck Soo Building 7F, Nonhyun-Dong,
Kangnam-Gu, Seoul, Korea 135-010
TEL: 82-2-515-5305 / FAX: 82-2-515-5302

**Delta Electronics (Singapore) Pte. Ltd.**
8 Kaki Bukit Road 2, #04-18 Ruby Warehouse Complex,
Singapore 417841
TEL: 65-6747-5155 / FAX: 65-6744-9228

**Delta Power Solutions (India) Pte. Ltd.**
Plot No. 28, Sector-34, EHTP
Gurgaon-122001 Haryana, India
TEL: 91-124-416-9040 / FAX: 91-124-403-6045

### America

**Delta Products Corporation (USA)**
Raleigh Office
P.O. Box 12173,5101 Davis Drive,
Research Triangle Park, NC 27709, U.S.A.
TEL: 1-919-767-3813 / FAX: 1-919-767-3969

**Delta Products Corporation (Brazil)**
Sao Paulo Office
Rua Itapeva, Nº 26, 3º andar, Bela vista
ZIP: 01332-000 - São Paulo - SP - Brasil
TEL : 55-11-3568-3875 / FAX : 55-11-3568-3865

### Europe

**Deltronics (The Netherlands) B.V.**
Eindhoven Office
De Witbogt 15, 5652 AG Eindhoven, The Netherlands
TEL: 31-40-2592850 / FAX: 31-40-2592851


*We reserve the right to change the information in this catalogue without prior notice

VFD-VJ

VFD-VJ_C_EN_20100723

DELTA ELECTRONICS, INC.

# VFD-VJ

## Hybrid Servo Drive


www.delta.com.tw/industrialautomation

# VFD-VJ

## Hybrid Servo Drive

## Introduction

The hydraulic technology is widely adopted today in the control system of injection molding machines. The excellent features include high power-to-weight ratio, precise pressure and flow control, long-life design and also easy to maintenance. On the other hand, AC servo drive technology offers quick response rate, high accuracy and constant torque. A combination of hydraulic system and AC servo drive extends the features in servo, motor and hydraulics. It is not only a perfect combination of technology but also an innovation. The old technology implements high pressure to accurately control the flows, but today, the precise pressure and flow control feature in hydraulic system eliminates energy loss problem and reduces waste of energy. The new technology is now in position to enhance green design concept and green manufacturing technology in order to create more value for customers.

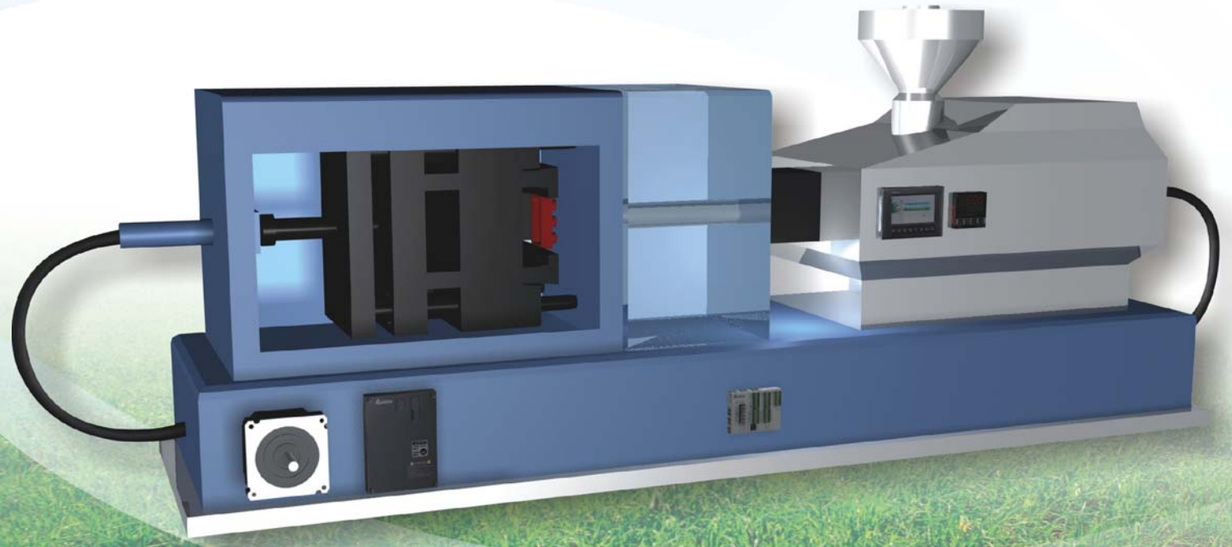

Low system temperature

Keep holding pressure for a long time

Easy refurbishment of old machines

Good frequency response

Ultra energy-saving

Highly accurate repeatability

VFD-VJ

## Injection Molding Machine- Hydraulic System

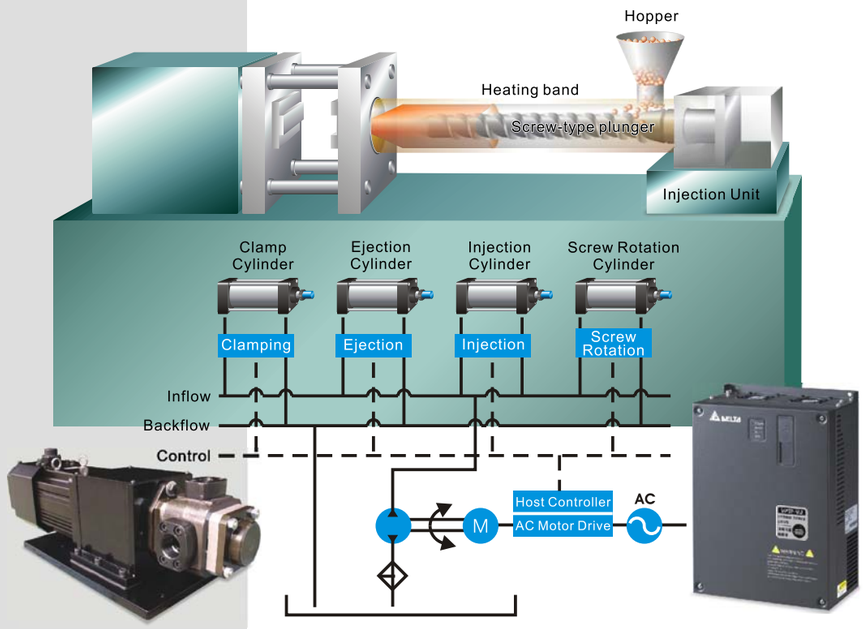


## Structure of a Hybrid Servo System

After getting the pressure and flow command from the injection molding machine, it performs PID calculation with actual pressure and speed feedback to drive the servo motor and hydraulic pump with a fast response time and high repeat accuracy.

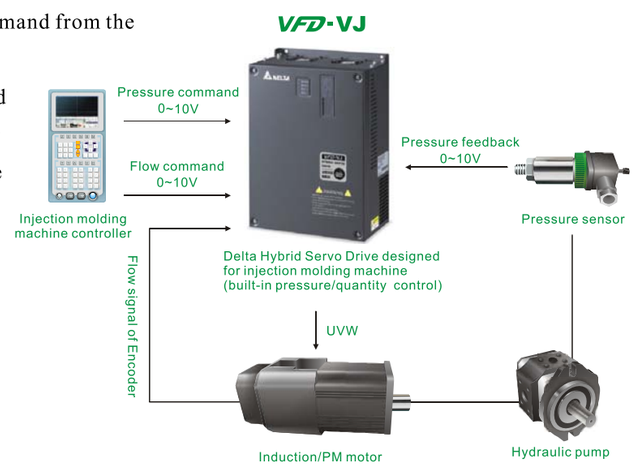


## Hybrid Energy System Features

### (1) Ultra energy-saving :

Save up to 60% compared traditional injection molding machine (fixed pump)

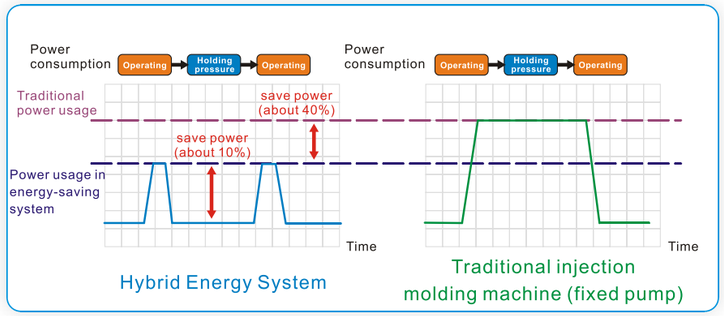


Save up to 75% depending on the different injection conditions

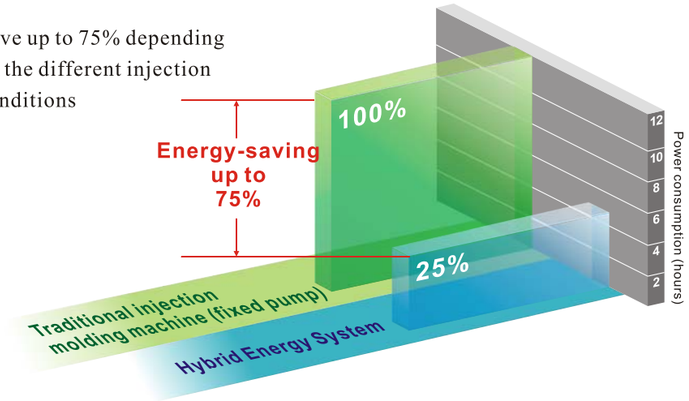


### (2) Low system temperature :

decreases system temperature by 5~10°C to save cooling costs

### (3) Highly accurate repeatability :

results in accurate control of flow and pressure

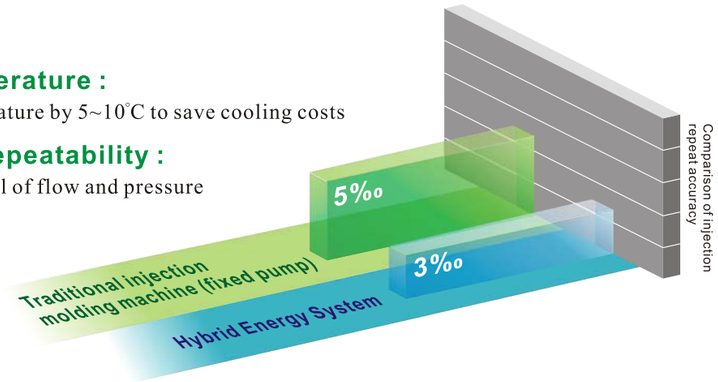

VFD-VJ

**(4) Long pressure holding time :** benefit to thick product manufacture

**(5) Good frequency response rate :** up to 50 ms

### Hydraulic System Flow Curve

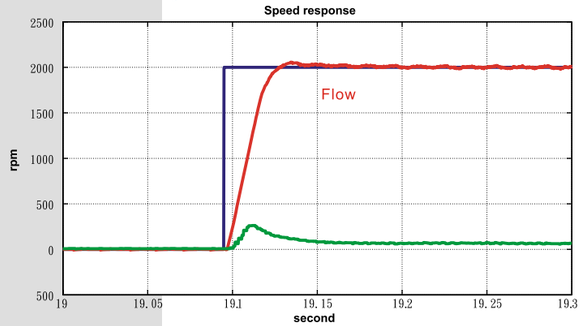


### Hydraulic System Injection Curve and Pressure Holding Curve

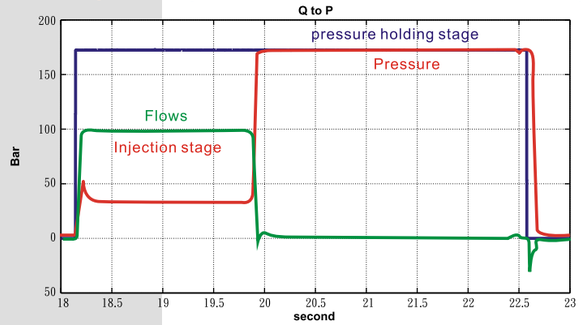


### Hydraulic System Pressure Curve

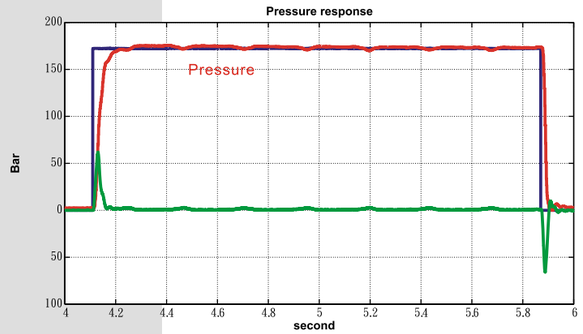


**(6)Easy refurbishment of old machines :** support analog command (0-1A) without host controller

## ● Main power consumption of traditional injection molding machine

When using a hydraulic system, the power consumption is more than 75% of the whole injection system. Different pressures and flows are required during the process, including mold closing, injection, holding pressure and mold opening. When the flow and pressure requirements exceed the settings, the relief or proportional valve will be adjusted, resulting in a 40%-75% higher power consumption.

### Power-consumption curve during injection molding

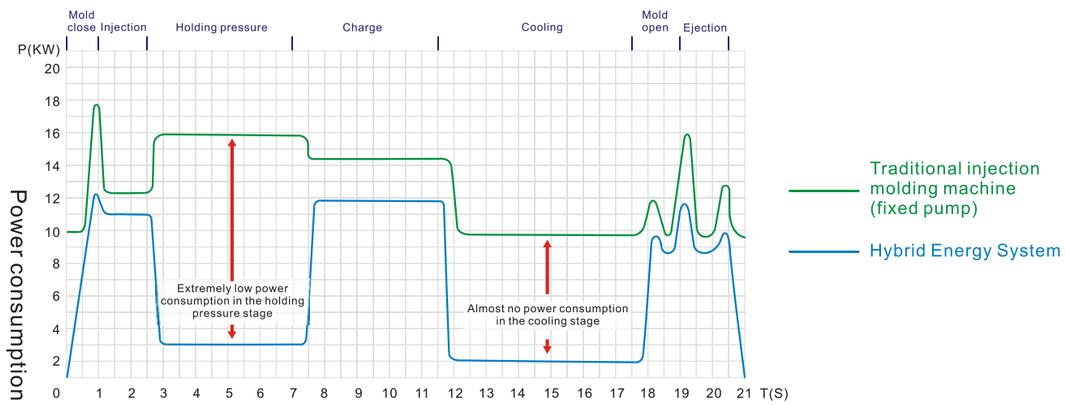


## Model Explanation of Hybrid Servo Drive

**VFD 110 VL 23 A - J**

- VFD-VJ Series Hybrid Servo Drive
- Version
- Input voltage
  23: 230V 3-phase 43: 460V 3-phase
- Power range (110=11kW, etc.)
- Series name

VFD-VJ

## Specification

| | | | | | | | | | |
|---|---|---|---|---|---|---|---|---|---|
| 230V | Frame | | C | | | D | | E2 | |
| | Model Number VFD-__VL__A-J | 055 | 075 | 110 | 150 | 185 | 220 | 300 | 370 |
| | Power (kW) | 5.5 | 7.5 | 11 | 15 | 18.5 | 22 | 30 | 37 |
| | Horsepower (HP) | 7.5 | 10 | 15 | 20 | 25 | 30 | 40 | 50 |
| Output | Rated output (A) | 21.9 | 27.1 | 41.1 | 53 | 70.0 | 79 | 120 | 146 |
| | Max. Current (A) (continuous 60 seconds) | 32 | 40 | 61 | 79 | 105 | 118.5 | 180 | 219 |
| Power | Input Current (A) | 25 | 31 | 47 | 60 | 80 | 90 | 106 | 126 |
| | Input Voltage Tolerance | 3-phase 200~240V 50/60Hz | | | | | | | |
| | Mains Voltage Tolerance | ±10%(180~264V) | | | | | | | |
| | Mains Frequency Tolerance | ±5%(47~63Hz) | | | | | | | |
| | Weight (kg) | 8 | 10 | 10 | 13 | 13 | 13 | 36 | 36 |

| | | | | | | | | | | | | |
|---|---|---|---|---|---|---|---|---|---|---|---|---|
| 460V | Frame | | C | | | D | | | E1 | | E2 | |
| | Model Number VFD-__VL__A-J | 055 | 075 | 110 | 150 | 185 | 220 | 300 | 370 | 450 | 550 | 750 |
| | Power (kW) | 5.5 | 7.5 | 11 | 15 | 18.5 | 22 | 30 | 37 | 45 | 55 | 75 |
| | Horsepower (HP) | 7.5 | 10 | 15 | 20 | 25 | 30 | 40 | 50 | 60 | 75 | 100 |
| Output | Rated output (A) | 12.3 | 15.8 | 21 | 27 | 34 | 41 | 60 | 73 | 91 | 110 | 150 |
| | Max. Current (A) (continuous 60 seconds) | 18 | 23 | 31 | 40 | 51 | 62 | 90 | 110 | 136 | 165 | 225 |
| Power | Input Current (A) | 14 | 18 | 24 | 31 | 39 | 47 | 56 | 67 | 87 | 101 | 122 |
| | Input Voltage Tolerance | 3-phase 380~480V, 50/60Hz | | | | | | | | | | |
| | Mains Voltage Tolerance | ±10%(342~528V) | | | | | | | | | | |
| | Mains Frequency Tolerance | ±5%(47~63Hz) | | | | | | | | | | |
| | Weight (kg) | 8 | 10 | 10 | 13 | 13 | 13 | 36 | 36 | 36 | 50 | 50 |

| | | |
|---|---|---|
| General Specifications | Control Method | SVPWM |
| | Speed Detector | Resolver |
| | Speed Input Command | DC 0~10V, support 3-point adjustment for analog inputs |
| | Pressure Input Command | DC 0~10V, support 3-point adjustment for analog inputs |
| | Pressure Feedback Command | DC 0~10V |
| | General Input Signal | 5 ch DC24V 8mA |
| | General Output Signal | 2 ch DC24V 50mA，1 ch Relay output |
| | Analog Output Voltage | 1 ch dc 0~10V |
| Optional Accessories | Speed Feedback PG Card | Necessary EMVJ-PG01R (refer to appendix A) |
| | Brake Resistor | Necessary (refer to appendix A) |
| | Pressure Sensor | Necessary, only pressure sensors with output signal 0-10V can be used (max. pressure value can be set by Pr.00-08) |
| | EMI Filter | Optional (refer to Appendix A) |
| Protections | Motor Protection | Electronic thermal relay protection |
| | Over-current | 300% of rated current |
| | Ground leakage current | Higher than 50% rated current |
| | Overload Ability | 150% for 60 seconds; 200% for 3 seconds |
| | Voltage Protection | Over-voltage Level: Vdc>400/800 V; Low-voltage Level: Vdc<200/400 V |
| | Mains Input Over-Voltage | Varistor (MOV) |
| | Over-temperature | Built-in Temperature Sensor |
| Environment | Protection Level | NEMA 1/IP20 |
| | Operation Temperature | -10℃~45℃ |
| | Storage Temperature | -20℃~60℃ |
| | Humidity | <90% RH (non-condensing) |
| | Vibration | <20Hz: 1.0G, 20 to 60Hz: 0.6G |
| | Cooling System | Force cooling (RUN, STOP) |
| | Installation Location | Altitude 1,000m or lower (keep away from corrosive gasses, liquid and dust) |
| | Certifications | CE |

NOTE: Built-in brake chopper for models 22kW and below

## Wiring Diagram

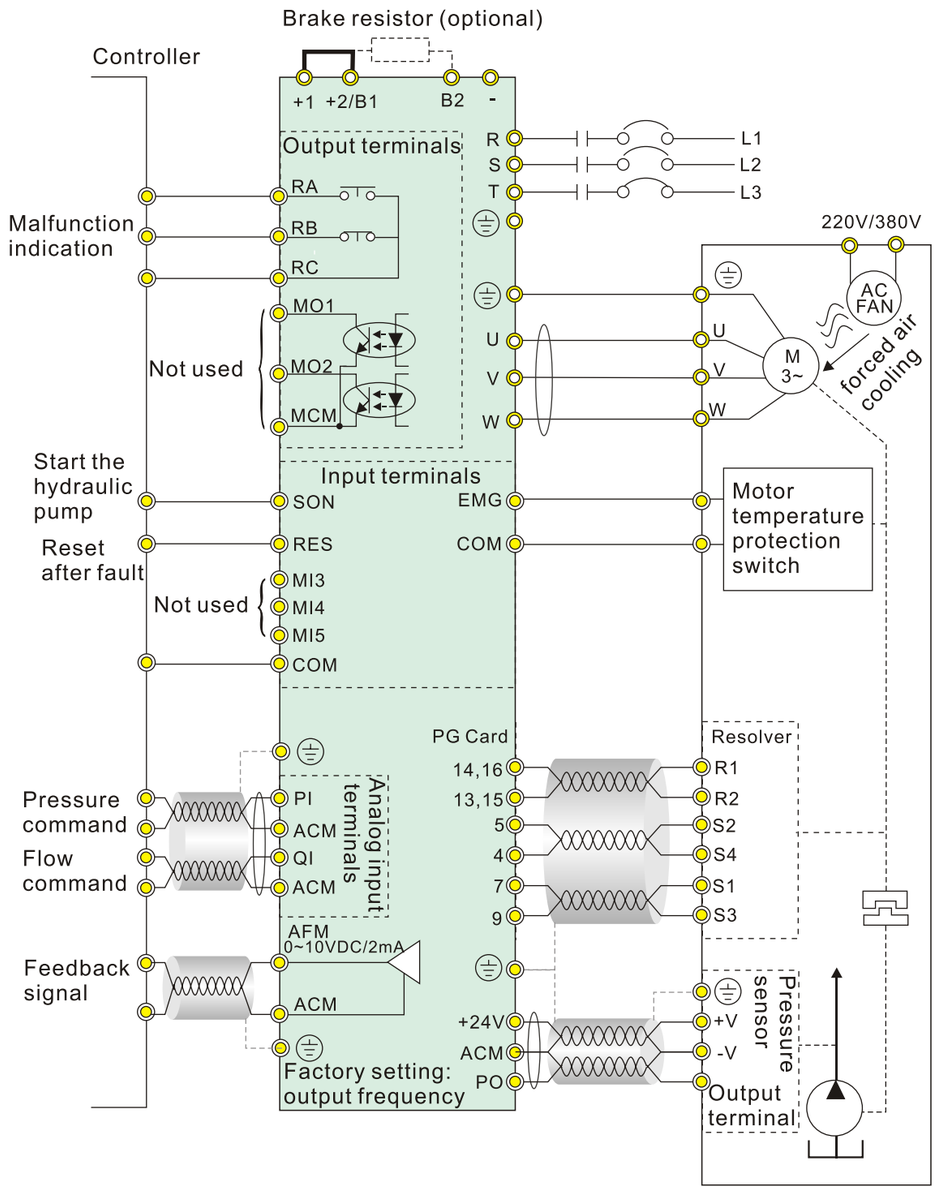

VFD-VJ

## Dimensions

### • Frame C

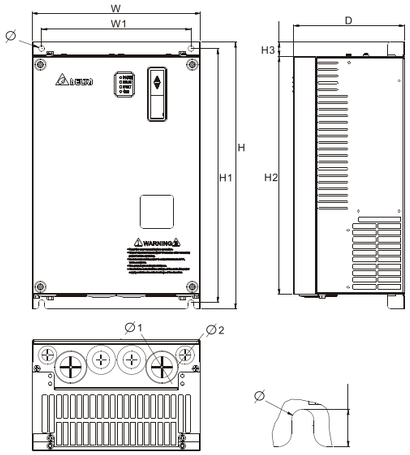


Unit : mm[inch]

| Frame | W | W1 | H | H1 | H2 | H3 | D | Ø | Ø1 | Ø2 | ●3 |
|---|---|---|---|---|---|---|---|---|---|---|---|
| C | 235 [9.25] | 204 [8.03] | 350 [13.78] | 337 [13.27] | 320 [13.60] | - | 136 [5.35] | 6.5 [0.26] | - | 34 [1.34] | 22 [0.87] |

### • Frame D

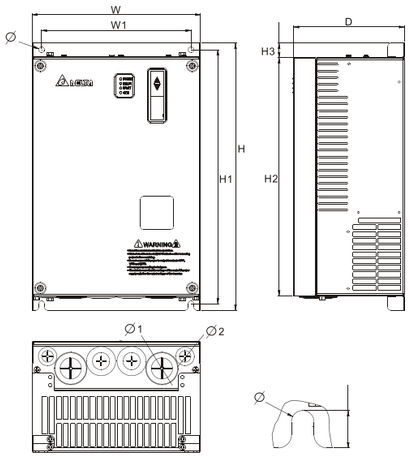


Unit : mm[inch]

| Frame | W | W1 | H | H1 | H2 | H3 | D | Ø | ●1 | ●2 | ●3 |
|---|---|---|---|---|---|---|---|---|---|---|---|
| D | 255.0 [10.04] | 226.0 [8.90] | 403.8 [15.90] | 384.0 [15.12] | 360.0 [14.17] | 21.9 [0.86] | 168.0 [6.61] | 8.5 [0.33] | 44 [1.73] | 34 [1.34] | 22 [0.87] |

## Dimensions

### • Frame E

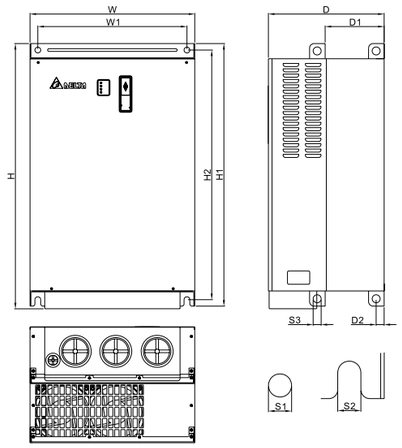


Unit : mm[inch]

| Frame | W | W1 | H | H1 | H2 | D | D1 | D2 | S1 | S2 | S3 |
|---|---|---|---|---|---|---|---|---|---|---|---|
| E1 | 370.0 [14.57] | 335.0 [13.19] | - | 589.0 [23.19] | 560.0 [22.05] | 260.0 [10.24] | 132.5 [5.22] | 18.0 [0.71] | 13.0 [0.51] | 13.0 [0.51] | 18.0 [0.71] |
| E2 | 370.0 [14.57] | 335.0 [13.19] | 595.0 [23.43] | 589.0 [23.19] | 560.0 [22.05] | 260.0 [10.24] | 132.5 [5.22] | 18.0 [0.71] | 13.0 [0.51] | 13.0 [0.51] | 18.0 [0.71] |

## Software

Parameters, monitoring and communication can be set by keypad or software.

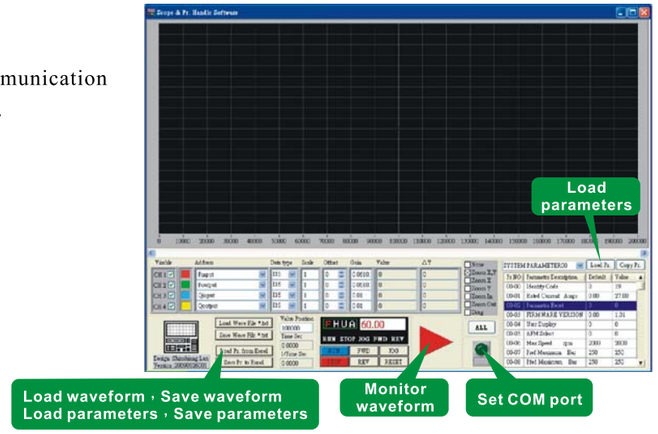

VFD-VJ

## How to Select the Right Hybrid Energy System

### (1) Motor Power Selection

- Required torque (N · M) $T = \frac{q \cdot \Delta p}{2\pi \cdot \eta m}$
- Output power (kW) $N = \frac{2\pi \cdot T \cdot n}{60{,}000} = \frac{T \cdot n}{9{,}550} = \frac{Q \cdot \Delta p}{60 \cdot \eta t}$

| | | |
|---|---|---|
| q：Displacement(cm3) | n：Rotation speed | Δp：Valid pressure difference (Mpa) |
| Q：Required flow L/min | ηm：Pump mechanical efficiency | ηt：Pump total efficiency |

### (2) Solution for Signal Interferences

When the drive is installed at the control panel, protections for the signal interference are:

- The wirings of main circuit and control circuit must be separate.
- Use shielding cable for the control circuit
- Proper grounding when necessary
- Use shielded wire for the main circuit wiring

### (3) How to Choose a Suitable Hybrid Servo Drive and Motor

In actual applications, the selection of hybrid servo drive and motor will be different due to different oil systems. In the following examples a flow rate of 64L/min and a max. holding pressure of 17.5MPa are used.

- Displacement of Hydraulic Pumps：get the displacement of hydraulic pump (cc/rev) from max. System flow (L/min)
  Example: Assume that max. system flow is 64L/min. and max. motor speed is 2000rpm. The displacement of hydraulic pump will be 64/2000*1000=32cc/rev
- Max. motor torque：get the max. torque from max. pressure and the displacement of hydraulic pump
  Example: Assume that the max. pressure is 17.5MPa and the displacement of the hydraulic pump is 32cc/rev. The torque will be 17.5*32*1.3/(2p) = 116Nm (the factor 1.3 is for compensation of total system losses and it can be changed to1.2-1.3 as required)
- Rated motor torque and rated motor power：The required torque for the holding pressure at the max. pressure should be double of the rated motor torque or less (use the data provided from the motor plant as the first priority). Because the motor temperature operated under this situation is easily over temperature. Assume that we choose the double of the rated torque, the motor can be 9.1kW* with the rated speed 1500rpm when the rated motor torque is 58N-m.
  *Motor Power Formula : $P(W)=T(N\text{-}m)\times\omega(rpm\times 2\pi/60)$
- Max. Motor Current：
  If getting the coefficient kt(Torque/A)=3.31 in the motor specification, max. current is about 116/3.31=35A when the max. Torque is 116N-m.
- Select the Right Drive：Please choose the right drive by the customers' requirement. Assume that the ability of drive's overload is 150% for 60 seconds and 200% for 3 seconds. When the holding pressure is at max. pressure 17.5MPa with 32cc/rev hydraulic pump, the motor current it requires is 35A.

NOTE If there is no suitable motor, please use the next higher power motor.
Please contact Delta if you have any questions about hybrid servo drive or the integration with your current system.

### (4) Select the right pressure sensor : optimum linearity with signal range 0 to 10V

### (5) Select the right shaft coupling : select the shaft coupling diameter to match the motor shaft diameter with good alignment and no clearance. It is recommended to choose a flexible coupling or a rigid coupling.

### (6) Hydraulic Pumps

- Select the displacement of hydraulic pump that matches the require flow and motor speed
- If noise is the primary concern, a screw pump or an internal gear pump fulfills the demand of low-noise operation.
- A piston pump fulfills the demand of high volumetric efficiency.
- Commonly-used hydraulic pumps:

| Hydraulic Pump Types | Volumetric efficiency | Flow Pulsation | Speed | Noise |
|---|---|---|---|---|
| Internal Gear Pump | Low | Medium | Medium | Low |
| Piston Pump | High | Low | Low | High |
| Screw Pump | Medium | High | High | Medium |

## Accessories

### (1) Braking Resistor

| Voltage | Applicable Motor HP | Applicable Motor kW | Full-load Torque kg-M | Braking Unit Model VFDB No. of Units Used | Resistor Value Specification for each Hybrid Servo Drive | Braking Torque 10ED% | Min Equivalent Resistor Value for Each Hybrid Servo Drive |
|---|---|---|---|---|---|---|---|
| 230V | 7.5 | 5.5 | 3.111 | | 2400W 16Ω | 125 | 16Ω |
| | 10 | 7.5 | 4.148 | | 3000W 12Ω | 125 | 12Ω |
| | 15 | 11 | 6.186 | | 4800W 9Ω | 125 | 9Ω |
| | 20 | 15 | 8.248 | | 4800W 6.8Ω | 125 | 6.8Ω |
| | 25 | 18.5 | 10.281 | | 6000W 6Ω | 125 | 6Ω |
| | 30 | 22 | 12.338 | | 9600W 5Ω | 125 | 5Ω |
| | 40 | 30 | 16.497 | 2015*2 | 6000W 5Ω | 125 | 5Ω |
| | 50 | 37 | 20.6 | 2015*2 | 9600W 4Ω | 125 | 4Ω |
| 460V | 7.5 | 5.5 | 3.111 | | 500W 50Ω | 125 | 50Ω |
| | 10 | 7.5 | 4.148 | | 1000W 40Ω | 125 | 40Ω |
| | 15 | 11 | 6.186 | | 1000W 33Ω | 125 | 33Ω |
| | 20 | 15 | 8.248 | | 1500W 25Ω | 125 | 25Ω |
| | 25 | 18.5 | 10.281 | | 4800W 21Ω | 125 | 21Ω |
| | 30 | 22 | 12.338 | | 4800W 19Ω | 125 | 19Ω |
| | 40 | 30 | 16.497 | 4030*1 | 6000W 20Ω | 125 | 20Ω |
| | 50 | 37 | 20.6 | 4045*1 | 9600W 16Ω | 125 | 16Ω |
| | 60 | 45 | 24.745 | 4045*1 | 9600W 13.6Ω | 125 | 13.6Ω |
| | 75 | 55 | 31.11 | 4030*2 | 12000W 10Ω | 125 | 10Ω |
| | 100 | 75 | 42.7 | 4045*2 | 19200W 6.8Ω | 125 | 6.8Ω |

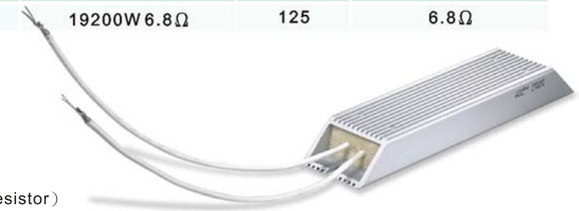

(ASDA-A2_C_TC_20090824.pdf, P28 Regenerative Resistor)

VFD-VJ

## (2) VFDB Braking Unit

| Voltage Level | | 230V Series | | 460V Series | | |
|---|---|---|---|---|---|---|
| Model - VFDB- □□□□ | | 2015 | 2022 | 4030 | 4045 | 4132 |
| Ma. Motor Capacity (kW) | | 15 | 22 | 30 | 45 | 132 |
| Output Rating | Max. Discharge Current (Ipeak) 10ED% | 40 | 60 | 40 | 60 | 240 |
| | Continuous Discharge Current (A) | 15 | 20 | 15 | 18 | 75 |
| | Braking Start-Up Voltage (DC) | 330/345/360/ 380/400/415±3V | | 660/690/720/760/ 800/830±6V | | 618/642/667/ 690/725/750±6V |
| Input Rating | DC Voltage | 200~400VDC | | 400~800VDC | | 480~750VDC |
| Protection | Heat Sink Overheat | Temperature over +95°C | | | | |
| | Alarm Output | RELAY contact 5A120Vac/28Vdc (RA.RB.RC) | | | | |
| | Power Charge Display | Blackout until bus (P-N) voltage is below 50VDC | | | | |
| Environment | Installation Location | Indoor (no corrosive gases, metallic dust) | | | | |
| | Operation Temperature | -10℃～+50℃ | | | | |
| | Storage Temperature | -20℃～+60℃ | | | | |
| | Humidity | 90%RH Non-Condensing | | | | |
| | Vibration | Below 20Hz 9.8m/S²(1G) 、20～50Hz 2m/S²(0.2G) | | | | |
| Mechanical Configuration | | Wall-mounted enclosed type Ip50 | | | | Wall-mounted enclosed type Ip10 |

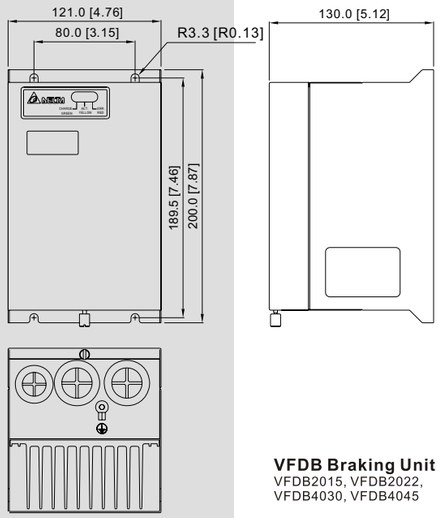



**VFDB Braking Unit :**
VFDB2015, VFDB2022,
VFDB4030, VFDB4045

## (3) Non-Fuse Breaker :

| Comply with UL certification：Per UL 508, paragraph 45.8.4, part a, NFB rated current must be between 2~4 times of hybrid servo drive rated input current. | | Fuse Specification Chart (Fuses with specification smaller than the following table are allowed.) | | | |
|---|---|---|---|---|---|
| Three-phase | | Input Current (A) | Output Currentl (A) | Line Fuse | |
| Model | Recommended non-fuse breaker (A) | | | I (A) | Bussmann P/N |
| VFD055VL23A-J | 50 | 26 | 25 | 50 | JJN-50 |
| VFD055VL43A-J | 30 | 14 | 13 | 30 | JJN-30 |
| VFD075VL23A-J | 60 | 34 | 33 | 60 | JJN-60 |
| VFD075VL43A-J | 40 | 19 | 18 | 40 | JJN-40 |
| VFD110VL23A-J | 100 | 50 | 49 | 100 | JJN-100 |
| VFD110VL43A-J | 50 | 25 | 24 | 50 | JJN-50 |
| VFD150VL23A-J | 125 | 60 | 65 | 125 | JJN-125 |
| VFD150VL43A-J | 60 | 32 | 32 | 60 | JJN-60 |
| VFD185VL23A-J | 150 | 75 | 75 | 150 | JJN-150 |
| VFD185VL43A-J | 75 | 39 | 38 | 75 | JJN-70 |
| VFD220VL23A-J | 175 | 90 | 90 | 175 | JJN-175 |
| VFD220VL43A-J | 100 | 49 | 45 | 100 | JJN-100 |
| VFD300VL23A-J | 225 | 110 | 120 | 225 | JJN-225 |
| VFD300VL43A-J | 125 | 60 | 60 | 125 | JJN-125 |
| VFD370VL23A-J | 250 | 142 | 145 | 250 | JJN-250 |
| VFD370VL43A-J | 150 | 63 | 73 | 150 | JJN-150 |
| VFD450VL43A-J | 175 | 90 | 91 | 175 | JJN-175 |
| VFD550VL43A-J | 250 | 130 | 110 | 250 | JJN-250 |
| VFD750VL43A-J | 300 | 160 | 150 | 300 | JJN-300 |

## (4) Reactor :

| | | AC Input Reactor Specification | | | | | | | | | | | AC Output Reactor Specification | | | | | | | | | | | | | | | | | | | |
|---|---|---|---|---|---|---|---|---|---|---|---|---|---|---|---|---|---|---|---|---|---|---|---|---|---|---|---|---|---|---|---|---|
| | | 460V, 50/60Hz, three-phase | | | | | | | | | | | 230V, 50/60Hz, three-phase | | | | | | | | 460V, 50/60Hz, three-phase | | | | | | | | | | | |
| KW | | 5.5 | 7.5 | 11 | 15 | 18.5 | 22 | 30 | 37 | 45 | 55 | 75 | 5.5 | 7.5 | 11 | 15 | 18.5 | 22 | 30 | 37 | 5.5 | 7.5 | 11 | 15 | 18.5 | 22 | 30 | 37 | 45 | 55 | 75 |
| HP | | 7.5 | 10 | 15 | 20 | 25 | 30 | 40 | 50 | 60 | 75 | 100 | 7.5 | 10 | 15 | 20 | 25 | 30 | 40 | 50 | 7.5 | 10 | 15 | 20 | 25 | 30 | 40 | 50 | 60 | 75 | 100 |
| Fundamental Amps | | 12 | 18 | 25 | 35 | 35 | 45 | 55 | 80 | 80 | 100 | 130 | 25 | 35 | 55 | 80 | 80 | 100 | 130 | 160 | 18 | 18 | 25 | 35 | 45 | 45 | 80 | 80 | 100 | 130 | 160 |
| Max. Continuous Amps | | 18 | 27 | 37.5 | 52.5 | 52.5 | 67.5 | 82.5 | 120 | 120 | 150 | 195 | 37.5 | 52.5 | 82.5 | 120 | 120 | 150 | 195 | 240 | 27 | 27 | 37.5 | 52.5 | 67.5 | 67.5 | 120 | 120 | 150 | 195 | 240 |
| Inductance (mh) | 3% Impedance | 2.5 | 1.5 | 1.2 | 0.8 | 0.8 | 0.7 | 0.5 | 0.4 | 0.4 | 0.3 | 0.2 | 0.5 | 0.4 | 0.25 | 0.2 | 0.2 | 0.15 | 0.1 | 0.075 | 1.5 | 1.5 | 1.2 | 0.8 | 0.7 | 0.7 | 0.4 | 0.4 | 0.3 | 0.2 | 0.15 |
| | 5% Impedance | 4.2 | 2.5 | 2 | 1.2 | 1.2 | 1.2 | 0.85 | 0.7 | 0.7 | 0.45 | 0.3 | 1.2 | 0.8 | 0.5 | 0.4 | 0.4 | 0.3 | 0.2 | 0.15 | 2.5 | 2.5 | 2 | 1.2 | 1.2 | 1.2 | 0.7 | 0.7 | 0.45 | 0.3 | 0.23 |

VFD-VJ

## (5) Pulse Generator PG Card

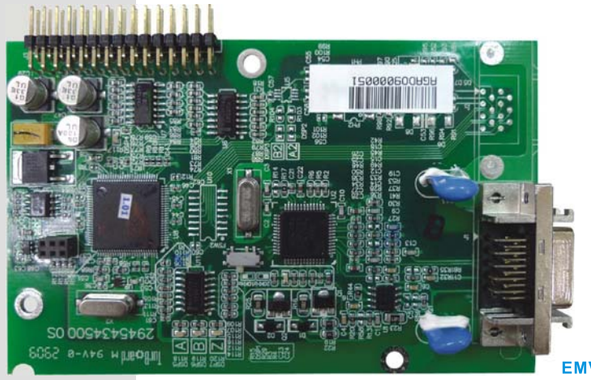

EMVJ-PG01R

| | |
|---|---|
| EMVJ-PG01R | Resolver Generator Card |
| EMVJ-PG01U | Linedriver (ABZ+UVW) |

## (6) EMI Filter

| | 230V 3-phase Model | Filter Model Name | Motor Cable Length(m) |
|---|---|---|---|
| 230V | VFD055VL23A-J | KMF336A | 50 |
| | VFD075VL23A-J | KMF336A | 50 |
| | VFD110VL23A-J | KMF350A | 50 |
| | VFD150VL23A-J | KMF370A | 50 |
| | VFD185VL23A-J | KMF3100A | 50 |
| | VFD220VL23A-J | KMF3100A | 50 |
| | VFD300VL23A-J | KMF3150A | 50 |
| | VFD370VL23A-J | KMF3150A | 50 |
| 460V | VFD055VL43A-J | KMF318A | 50 |
| | VFD075VL43A-J | KMF325A | 50 |
| | VFD110VL43A-J | KMF325A | 50 |
| | VFD150VL43A-J | KMF336A | 50 |
| | VFD185VL43A-J | KMF350A | 50 |
| | VFD220VL43A-J | KMF350A | 50 |
| | VFD300VL43A-J | KMF370A | 50 |
| | VFD370VL43A-J | KMF370A | 50 |
| | VFD450VL43A-J | KMF3100A | 50 |
| | VFD550VL43A-J | KMF3150A | 50 |
| | VFD750VL43A-J | KMF3150A | 50 |

## (7) Zero Phase Reacto

RF220X00A

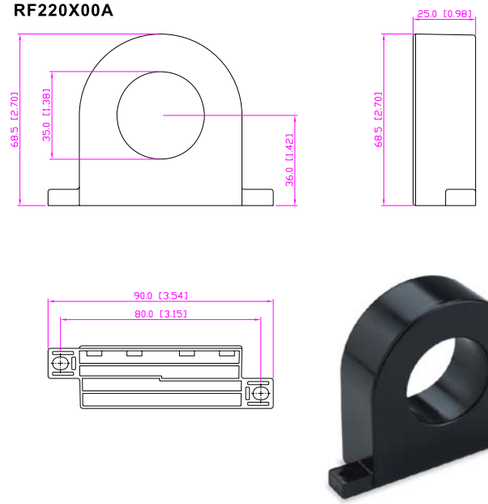


## (8) Toroidal Core

Toroidal Core (EAVJ-AP01)

## (9) USB Connection Interface

IFD6500 USB is a convenient RS485-to-USB converter.

## (10) Digital Keypad KPV-CE01

KPV-CE01

## Servo Motor

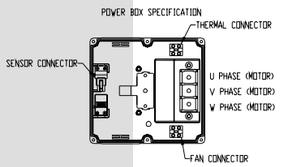


| Model | LL | LR | LS | LT | LU |
|---|---|---|---|---|---|
| ECMA-LR1875AF | 346.4 | 113 | 108.5 | 152.9 | 283.4 |
| ECMA-LR181BAF | 408.7 | 113 | 108.5 | 215.2 | 345.7 |

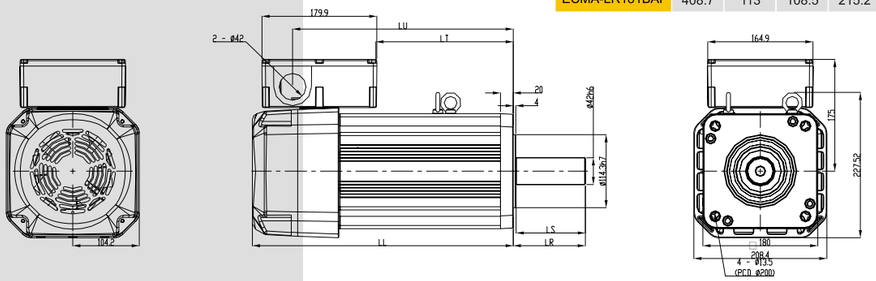


## Motor Specification

| Model ECMA | ECMA-LR1875AF | ECMA-LR181BAF |
|---|---|---|
| Frame (mm) | 180 | 180 |
| Rated output power (kW) | 7.5 | 11 |
| Rated Torque (N-m) | 47.75 | 70 |
| Max. torque (N-m) | 95.5 | 140 |
| Rated speed (r/min) | 1500 | 1500 |
| Max. speed (r/min) | 2000 | 2000 |
| Rated current (A) | 20 | 26 |
| Power rating (kW/s) | 228.5 | 343.4 |
| Rotor moment of inertia ($10^{-4}$Kg-m$^2$) | 99.78 | 142.7 |
| Mechanical time constant (ms) | 0.885 | 0.692 |
| Torque constant-KT (N-m/A) | 2.28 | 2.64 |
| Voltage constant-KE (mV/rpm) | 86.5 | 98.4 |
| Armature resistance (Ohm@25℃) | 0.167 | 0.1203 |
| Armature inductance (mH@25℃) | 4.8 | 4.05 |
| Electrical time constant (ms) | 28.74 | 33.67 |

### 8.1 Connector (Fan Activation)

**ASD-CNBR1000**

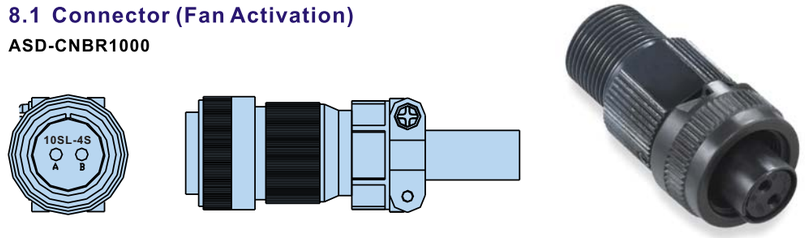


### 8.2 Power Cable

**ASD-CAPW2303/ASD-CAPW2305 (temperature sensor enclosed)**

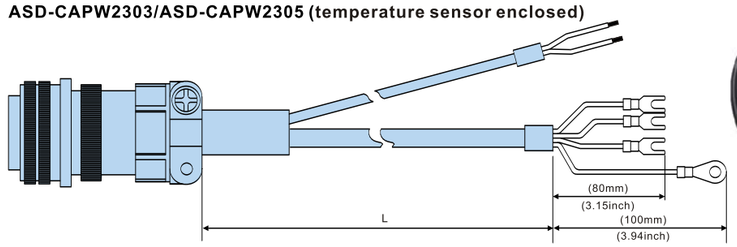


| Item | Part No. | Straight | L mm | L inc |
|---|---|---|---|---|
| 1 | ASD-CAPW2303 | MS 3106A-24-11S | 3000 ± 100 | 118 ± 4 |
| 2 | ASD-CAPW2305 | MS 3106A-24-11S | 5000 ± 100 | 197 ± 4 |

### 8.3 Encoder Cable

**ASD-CAEN1003/ ASD-CAEN1005**

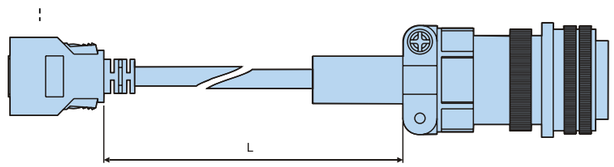


| Item | Part No. | Straight | L mm | L inc |
|---|---|---|---|---|
| 1 | ASD-CAEN1003 | MS 3106-20-29S | 3000 ± 100 | 118 ± 4 |
| 2 | ASD-CAEN1005 | MS 3106-20-29S | 5000 ± 100 | 197 ± 4 |